General Specifications

Model RAMC
Metal Short-stroke Rotameter

GS 01R01B02-00E-E

A float is guided concentrically to a special shaped conic metal tube. The position of this float is magnetically transmitted to the indicator. The short-tube Rotameter is used for measurement of flow rates of liquids and gases. Its special application is in troubled, opaque or aggressive mediums. The instrument is mounted in a vertical pipeline with flow direction upwards.
The indicators are exchangeable without influence on the accuracy.

RAMC with housing type 90

FEATURES

- Different process connections like flanges according EN and ASME
- All wetted parts in stainless steel or PTFE
- Maximum flow 0.025 - 130 m³/h water resp. 0.75 - 1400 m³/h air (20 °C / 1.013 bar abs)
- Measuring accuracy acc. Directive VDI/VDE 3513 sheet 2 (q_G=50%)
- Float damping to avoid float bouncing with gas applications
- Optional heat tracing (with steam or fluid heat carrier)
- Indicator in stainless steel, aluminium, protection class IP66/67
- Local indicator without additional power supply
- Microprocessor controlled transmitter with 24 V, 115 V or 230 V power supply
- Intrinsically safe version (Ex-i): ATEX, FM, CSA, SAA, NEPSI, CCOE
- Flame proof version (Ex-d): ATEX, NEPSI, CCOE)
- Dust explosion proof: ATEX, NEPSI, CCOE
- Suitable for SIL application, FMEDA report available
- Limit switches, also available as “Fail Safe” version

Electronic transmitter as standard with local-controlling display with the following features :

- Flow indication (totalize, actual, percent)
- Indication of different volume- and mass flow units
- Second (manual) calibration storing
- Patented float blocking indication function
- Signal output damping
- Error message indication
- Temperature measurement in the electronic transmitter
- HART- communication
- Profibus PA- communication

RAMC with housing type 91

Contents	
Features	page 1
Standard Specifications	page 2
Compliance with IEC 61508	page 4
Compliance with ISO 13849	page 4
Hazardous Area Specifications	page 5
Installation	page 8
Model Specifications	page 11
Options	page 11
Process connection table for metal tubes	page 13
Flow tables metal tubes	page 14
Process connection and flow table for tubes with PTFE lining	page 15
Temperature graphs	page 16
Dimensions and weights	page 17

YOKOGAWA
Rota Yokogawa GmbH & Co. KG
Rheinstr. 8
D-79664 Wehr
Germany

© Copyright October 2004 (Rü)
21st edition, July 2011 (Rü)

STANDARD SPECIFICATIONS

MEASURING TUBE

Materials of wetted parts :
- Stainless steel AISI 316L (1.4404)
- PTFE
- Other materials on request

Fluids to be measured :
suitable for a variety of liquids, gas and steam

Measuring range :
See table 11 and 12

Measuring range ratio :
10:1

Process connections / Stainless steel :
- Flanges : - acc. EN1092-1
  DN100 – DN150 PN16
  DN15 – DN100 PN40
  DN50 – DN80 PN63
  DN15 – DN50 PN100
  - acc. ASME B 16.5
  ½" – 6" Class 150 raised face
  ½" – 6" Class 300 raised face
  ½" – 3" Class 600 raised face
  Roughness of sealing
  Form B1 : RA 3.2 - 6.3
  Form B2 : RA 0.8 - 3.2
  ASME : RA 3.2 - 6.3
- Threaded connection :
  - male acc. DIN 11851
  - NPT- female
  - G- female
  - Clamp acc. DN25 / 1" – DN100 / 4"

Process pressure :
Depends on process connection, see table 10 to 12
higher pressure (up to 700 bar) on request

Process temperature :
- medium wetted parts made of stainless steel
  : -200 …+370 °C
- medium wetted parts made of PTFE
  : -80 … +130 °C

See fig. 7a to 7c

Measuring accuracy :
Table 1

Material of wetted parts	Size	**Measuring accuracy** acc. Directive VDI/ VDE 3513 sheet 2 (q_G=50%)
SS	DN 15 - 100	1.6%
SS	DN 125 - 150	2.5%
PTFE	DN 15 -100	2.5%

Heat tracing

Pressure Equipment Directive (PED) Directive 97/23/EG :
Tubes :
- Modul : H
- Fluid Group : 1 (dangerous fluids)
- Produced acc. to category
  : III
- Classification : Table 6 (piping)

Heating (options /T1 to /T6) :
- Art. 3 section 3 : (Volume < 1L)
- Fluid Group : 2 (non-dangerous fluids)
- Classification : Table 2 (vessels)

CANADIAN REGISTRATION NUMBERS (CRN) available upon request

Installation :
- Mounting direction : vertical
- Flow direction : upwards
- Mounting length : see tables 10, 12, 13, 14
- Straight pipe inlet length
  : DN 80/100 at least 5D, not necessary for smaller sizes

Weight :
See table 15

LOCAL INDICATOR
(Indicator/Transmitter Code -T)

Principle :
The indication is made by magnetic coupling of a magnet enclosed in the float and a magnet in the indication unit, which follows the movements of the float, with a pointer.

Indicator housing :
- Materials : - Stainless steel (1.4301 / 304) (housing type 90)
  - painted aluminium casting (housing type 91)
  each with safety-glass window
- Degree of protection :
  - IP66/67

Scales :
- Standard : removable aluminium plate with scale (double scale as option)
- Marking : direct readable units or percentage of Qmax.

Transportation- and Storage condition :
-40°C to +110°C

All Rights Reserved. Copyright © 2004, Rota Yokogawa

ELECTRONIC TRANSMITTER
(Indicator/Transmitter Code -E, -H, -G)

Standard type (Code -E) :

Power supply :
- 4- wire units with galvanic isolation :
  - 230 V AC +10 %/-15 %, 50/60 Hz, fuse 0.063 A, time lag, (5x20) mm
  - 115 V AC +10%/-15 %, 50/60 Hz, fuse 0.125 A, time lag, (5x20) mm
- 2/3- wire units : - U = 13.5 V... 30 V DC

Output signal :
- 4- wire units : - 0 - 20 mA, 4 – 20 mA
  - pulse output (option /CP) max. frequency 4 Hz see fig. 3
- 3- wire units : 0 - 20 mA, 4 - 20 mA
- 2- wire units : 4 - 20 mA

The 20 mA point is selectable between 60% and 100% of Qnom.

Load resistance :
- 4- wire units : ≤ 500 Ω
- 2/3- wire unit : ≤ (U-13.5 V)/20 mA

HART- communication type (Code -H) :

Power supply :
- 2-wire units : U = 13.5 V... 30 V DC

Output signal :
- 2- wire units : 4 – 20 mA

Load resistance :
- HART-version : 250 … 500 Ω

Profibus PA - communication type (Code -G) :
- 2- wire bus connection not polarity sensitive : 9 ... 32 V DC acc. to IEC 61568-2 and FISCO model
- Basic current : 14 mA
- Failure current (FDE) : 10mA additional to basic current
- Transmission rate : 31.25 kBaud
- AI block for volume flow or mass flow
- Configurable with PDM DD
- Supports I&M- functions

Digital display :
8- digits 7- segment-LC-display character height 6 mm

Process-/ Ambient temperature :
The dependency of the process temperature from the ambient temperature is shown in fig. 7a to fig. 7c.
The internal temperature of the electronic transmitter can be indicated on the display or checked via HART communication.

Measurement of the internal transmitter temperature :
- Range : -25 °C to +70 °C
- Accuracy : ± 5 °C

Transportation- and Storage condition :
-40 °C to +70 °C

Linearity [1] :
± 0.2 % f.s.

Hysteresis [1] :
± 0.1 % f.s.

Repeatability [1] :
± 0.1 % f.s.

Influence of power supply [1] :
± 0.1 % f.s.

Temperature coefficient of the output signal [1] :
± 0.5 % /10 K f.s.

AC-part of output signal [1] :
± 0.15 % f.s.

Long-time stability [1] :
± 0.2 % /year

Max. output signal :
21.5 mA

Output signal in case of failure :
≤ 3.6 mA (acc. NE 43)

Response time (99%) :
About 1.5 s (damping 1s)

[1] referenced to 20°C ambient temperature

Electromagnetic compatibility (EMC) :
- Acc. EN 61326-1: 2006, Class A, Table 2 and EN 61326-2-3 : 2006 :
  Criterion A, restriction: HF- immunity between 500 MHz and 750 MHz : criterion B
  RAMC with Profibus PA :
  Criterion A: Burst, Surge, HF- Immunity
  Criterion B: ESD
  In case of single sided grounding of the cable shield it is possible that for all tests criterion B is reached.

Unit safety acc. DIN EN 61010-1: 2001 :
- Over voltage category : II (acc. VDE 0110 or IEC 664)
- Pollution degree : I
- Safety class : I (with 115 / 230V AC power supply)
  III (with 24V DC power supply and Fieldbus type)

POWER SUPPLY FOR ELECTRONIC TRANSMITTER
(Option /UT)

Type :
Power supply with galvanically separated input and output
- RN221N-B1, HART- compatible

Supply voltage :
20 ... 250 V DC / AC 50/60 Hz

Maximum load :
700 Ω

Output signal :
4 - 20 mA

CABLE GLAND (for transmitter –E, -H and –G) :

Size :
- M16x1.5 (standard)
- Thread M20x1.5 (option /A13; standard for option /KF1)
- Thread ½" NPT (option /A5)

Cable diameter :
6 – 9 mm

Maximum cross section of core :
Ø 1.5 mm²

LIMIT SWITCHES IN STANDARD VERSION
(option /K1 to /K3)

Type :
Inductive proximity switch SC3.5-N0 acc. DIN EN 60947-5-6

Nominal voltage :
8 V DC

Output signal :
≤ 1 mA or ≥ 3 mA

LIMIT SWITCHES IN FAIL SAFE VERSION
(option /K6 to /K10)

Type :
Inductive proximity switch SJ3.5-SN; SJ3.5-S1N acc. DIN EN 60947-5-6 (NAMUR)

Nominal voltage :
8 V DC

Output signal :
≤ 1 mA or ≥ 3 mA

HYSTERESIS OF LIMIT SWITCHES

Min-contact / Max-contact :
- pointer movement ≈ 0.8 mm
- float movement ≈ 0.8 mm

Minimum distance between 2 contacts :
≈ 2 mm

All Rights Reserved. Copyright © 2004, Rota Yokogawa

CABLE GLAND (option /K1 to /K10)

Size :

- M16x1.5 (standard)
- Thread M20x1.5 (option /A13; standard for option /KF1)
- Thread ½" NPT (option /A5)

Cable diameter :

6 – 9 mm

Maximum cross section of core :

Ø 1.5 mm²

POWER SUPPLY FOR LIMIT SWITCHES (Option /W__)

Type :

acc. DIN EN 50227 (NAMUR)

- KFA5-SR2-Ex*-W (115 V AC), * = 1 or 2
- KFA6-SR2-Ex*-W (230 V AC), * = 1 or 2
- KFD2-SR2-Ex*-W (24 V DC), * = 1 or 2
- KHA6-SH-Ex1 (115/230 V AC), Fail Safe, 1 channel
- KFD2-SH-Ex1 (24 V DC), Fail Safe, 1 channel

Power supply :

- 230 V AC ± 10%, 45-65Hz
- 115 V AC ± 10%, 45-65Hz
- 24 V DC ± 25%

Relay output :

1 or 2 potential-free changeover contact(s)

Switching capacity :

max. 250 V AC, max. 2 A

Note :

If Fail-Safe limit switch option /K6 or /K7 is ordered, for power supply option /W2E or /W4E must be selected.
If Fail-Safe limit switch option /K8, /K9 or /K10 is ordered, for power supply option /W2F or /W4F must be selected.

SWITCHING LEVELS FOR LIMIT SWITCHES

Table 2 Min, Max and Min-Max-contact in standard version

		Option /K1	Option /K2	Option /K3
Function	Pointer	Signal	Signal	Signal
		SC3,5-N0	SC3,5-N0	SC3,5-N0
MAX	above LV	----	1 mA	1 mA
	below LV	----	3 mA	3 mA
Function	Pointer	Signal	Signal	Signal
		SC3,5-N0	SC3,5-N0	SC3,5-N0
MIN	above LV	3 mA	----	3 mA
	below LV	1 mA	----	1 mA
Note: LV = Limit value				

Table 3 Min, Max and Min-Max-contact in fail-safe version

		Option /K6	Option /K7	Option /K8
Function	Pointer	Signal	Signal	Signal
		SJ3,5-SN	SJ3,5-SN	SJ3,5-SN
MAX	above LV	----	1 mA	1 mA
	below LV	----	3 mA	3 mA
	Fail Safe	----	1 mA	1 mA
Function	Pointer	Signal	Signal	Signal
		SJ3,5-SN	SJ3,5-SN	SJ3,5-SN
MIN	above LV	3 mA	----	3 mA
	below LV	1 mA	----	1 mA
	Fail Safe	1 mA	----	1 mA
Note: LV = Limit value				

Table 4 Limit switch as Min-Min-contact in fail-safe version

		Option /K9
Function	Pointer	Signal
		SJ3,5-S1N
MIN	above LV	3 mA
	below LV	1 mA
	Fail Safe	1 mA
Function	Pointer	Signal
		SJ3,5-SN
MIN	above LV	3 mA
	below LV	1 mA
	Fail Safe	1 mA
Note: LV = Limit value		

Table 5 Limit switch as Max-Max-contact in fail-safe version

		Option /K10
Function	Pointer	Signal
		SJ3,5-SN
MAX	above LV	1 mA
	below LV	3 mA
	Fail Safe	1 mA
Function	Pointer	Signal
		SJ3,5-S1N
MAX	above LV	1 mA
	below LV	3 mA
	Fail Safe	1 mA
Note: LV = Limit value		

COMPLIANCE WITH IEC 61508

RAMC with local indicator and fail safe limit switches (-T[][]NNN /K6 ... /K10):
Suitable for application in safety functions up to and including SIL2.
RAMC with local indicator and standard limit switches (-T[][]NNN /K1 ... /K3):
Suitable for application in safety functions up to and including SIL2.
RAMC with 4-20mA output (-E[][]424 and -H[][]424):
Suitable for application in safety functions up to and including SIL1, but only with activated Float Blocking Indication.

Reliability data available on request in FMEDA report.

COMPLIANCE WITH ISO 13849

For Safety Metrics acc. to ISO 13849-2 please refer to the FMEDA report.

All Rights Reserved. Copyright © 2004, Rota Yokogawa

HAZARDOUS AREA SPECIFICATIONS

INTRINSIC SAFETY

Attention :

The maximum ambient temperature of the transmitter or of the limit switches according to the temperature class may not be exceeded because of heat transmission from the medium.

Table 6 Entity parameters of electronic transmitter

	Ui[V]	Ii[mA]	Pi[W]	Ci[nF]	Li[mH]	Tamax [°C]
KS1/2	30	101	1.4	4.16	0.15	70
KN1	30	152	1.4	4.16	0.15	70
FS1/CS1	30	100	1.4	40	0.15	70
SS1	30	186	1.4	60	0.15	65 *)
NS1	30	101	1.4	4.16	0.15	70
*) with limit switches : 40°C						

Intrinsically safe electronic transmitter 4 - 20mA (with/without HART-communication) with ATEX-certification (option /KS1) :

Certificate :
PTB 96 ATEX 2160X
Output signal :
4–20 mA (2- wire unit, 3- wire unit) ; 0-20mA (3- wire unit)
Explosion proof :
Ex ia IIC T6; group II ; category 2G
Entity parameter :
see table 6

Intrinsically safe electronic transmitter Profibus PA - communication with ATEX- certification (option /KS1) :

Certificate:
PTB 96 ATEX 2160X
Output signal :
Profibus PA
Explosion proof :
Ex ia IIB/IIC T4; group II ; category 2G

Table 7 Entity parameters

	IIC	IIB	FISCO IIB/IIC
Ui	24V	17,5V	acc. IEC 60079-27
Ii	250mA	280mA	
Li	negligible small	negligible small	
Ci	negligible small	negligible small	

Electronic transmitter 4 - 20mA (with/without HART-communication) type “n” (non incendive) acc. EN 60079-15 for category 3 (option /KN1) :

Output signal :
4–20 mA (2- wire unit, 3- wire unit) ; 0-20mA (3- wire unit)
Explosion proof :
Ex nL IIC T6 protection „nL”; group II ; category 3G
Dust proof :
Ex II 3D; group II ; category 3D
Max. surface temperature : 80°C
Entity parameter :
see table 6

Intrinsically safe / non incendive electronic transmitter with FM - certification (USA + Canada) (USA: option /FS1; Canada: option /CS1) :

Certificate :
No. : 3027471
Output signal :
4–20 mA (2-wire unit)
Explosion proof :
Intrinsic safe Cl. I, Div. 1, GP. A, B, C, D T6
Intrinsic safe Cl. 1, Zone 0, AEx ia IIC T6
Non incendive Cl. I, Div. 2, GP. A, B, C, D T6
Entity parameter of electronic transmitter :
see table 6

Intrinsically safe electronic transmitter with CCOE- certification (India)

Option /KS1 must be selected. CCOE- certificate is available at your Yokogawa Sales Office.

Intrinsically safe RAMC with NEPSI- certification (China) (option /NS1) :

Certificate :
GYJ05152
Output signal :
4–20 mA (2- wire unit, 3- wire unit) ; 0-20mA (3- wire unit)
Explosion proof :
Ex ia IIC T6
Max. Tamb. :
70°C
Entity parameter of electronic transmitter :
see table 6
Limit switches :
option /K1 to /K10
Entity parameter of limit switches :
see certificate NEPSI GYJ06542X

Intrinsically safe RAMC with SAA- certification (Australia) (option /SS1) :

Certificate :
AUS Ex3777X
Output signal :
4–20 mA (2- wire unit)
Explosion proof :
Ex ia IIC T5
Max. Tamb. :
65°C (with limit switches 40°C)
Degree of protection :
IP54
Entity parameter of electronic transmitter :
see table 6
Limit switches :
option /K6 to /K10
Entity parameter of limit switches :
see certificate AUS Ex 02.3839X

All Rights Reserved. Copyright © 2004, Rota Yokogawa

Power Supply for the intrinsically safe electronic transmitter (option /UT)

Type :
Power supply with galvanically separated input and output
- RN221N-B1, HART- compatible

Certificate :
PTB 00 ATEX 2018

Supply voltage :
20 ... 250 V DC / AC 50/60 Hz

Maximum load impedance :
700 Ω

Output signal :
4 - 20 mA

Control circuit :
Intrinsically safe [Ex ia] IIC; group II ; category (1)GD

Entity parameters :
see fig. 4

Intrinsically safe and dust proof limit switches with ATEX-certification (option /K1 ... /K10 with /KS1) :

Certificate:
- PTB 99 ATEX 2219X (SC3.5-NO)
- PTB 00 ATEX 2049X (SJ 3.5-S.N)
- ZELM 03 ATEX 0128X (for dust proof)

Explosion proof :
Ex ia IIC T6, group II category 2G

Dust proof (only indicator "T") :
Ex iaD 20 T 108 °C, group I I category 1D
Max. surface temperature : T108°C

Entity parameter :
see certificate of conformity

Limit switches for category 3 (option /K1 ... /K10 with /KN1):

Explosion proof :
EEx nL IIC T6 X protection „nL"; group II ; category 3G

Dust proof :
Ex II 3D; group II ; category 3D
Max. surface temperature : T112°C

Entity parameter :
see specification of SC3,5-N0 Blue (P&F)* (/K1 ... /K3)
see specification of SJ3,5-SN (P&F)* (/K6 ... /K10)
see specification of SJ3,5-S1N (P&F)* (/K6 ... /K10)
* P&F = Pepperl & Fuchs

Intrinsically safe / non incendive limit switches with FM- certification (USA) (option /K1 ... /K10 with /FS1) :

Explosion proof :
IS : Cl. I, Div. 1, Gp. ABCD, T6, Ta = 60°C,
NI : Cl. I, Div. 2, Gp. ABCD, T5, Ta = 50°C
Cl. II, Div. 1, Gp. EFG
Cl. III, Div. 1

Entity parameter :
see FM-control drawing 116-0165 for IS
see FM-control drawing 116-0155 for NI

Intrinsically safe limit switches with CSA- certification (Canada) (option /K1 ... /K3 with /CS1) :

Explosion proof :
Cl. I, II, III, Div. 1, Gp. ABCDEFG

Entity parameter :
see drawing 116-0047

Only in combination with option /WxA or /WxB.

Intrinsically safe limit switches with NEPSI-certification (China) (option /K1 .. /K10 with /NS1):

Certificate :
GYJ06542X

Explosion proof :
Ex ia IIC T1 ... T6

Entity parameter :
see certificate

Power supply for intrinsically safe limit switches (option W__):

Type :
acc. DIN EN 50227 (NAMUR)
- KFA5-SR2-Ex*-W (115 V AC)
- KFA6-SR2-Ex*-W (230 V AC)
- KFD2-SR2-Ex*-W (24 V DC)
- KHA6-SH-Ex1 (115/230 V AC), Fail Safe, 1 channel
- KFD2-SH-Ex1 (24 V DC), Fail Safe, 1 channel

Certificates :

- KFA5-SR2-Ex*-W:	ATEX	: PTB 00 ATEX 2081
	CSA	: 1029981 (LR 36087-19)
	FM	: ID 3011578
	NEPSI	: GYJ071110
- KFA6-SR2-Ex*-W:	ATEX	: PTB 00 ATEX 2081
	CSA	: 1029981 (LR 36087-19)
	FM	: ID 3011578
	NEPSI	: GYJ071110
- KHA6-SH-Ex1:	ATEX	: PTB 00 ATEX 2043
- KFD2-SR2-Ex*-W:	ATEX	: PTB 00 ATEX 2080
	CSA	: 1029981 (LR 36087-19)
	FM	: ID 3011578
	NEPSI	: GYJ071116
- KFD2-SH-Ex1:	ATEX	: PTB 00 ATEX 2042
	NEPSI	: GYJ091350

Control circuit (ATEX) :
[Ex ia] IIC; group II ; category (1)GD

Entity parameter :
see fig. 4 **(**ATEX) and certificate

Intrinsically safe electronic transmitter 4 - 20mA, with/without limit switches with ATEX- certification gas- and dust proof (option /KS2):

Certificate :
PTB 96 ATEX 2160X (Intrinsic safe electronic transmitter)
PTB 99 ATEX 2219X (Intrinsic safe limit switch SC3.5-N0)
PTB 00 ATEX 2049X (Intrinsic safe limit switch SJ 3.5-S.N)
IBExU 05 ATEX 1086 (Dust proof)

Output signal electronic transmitter:
4–20 mA (2-wire unit, 3-wire unit) ; 0-20mA (3-wire unit)

Explosion proof :
Ex ia IIC T6; group II ; category 2G

Dust proof :
Group II ; category 1D
Max. surface temperature TX : corresponding process temperature

Entity parameter :
see table 6 for electronic transmitter
see certificates for limit switches

Housing :
Painted aluminium casting, type 91

Ambient temperature :
-20 °C to 60 °C (category 2G / 2D)
-20 °C to 55 °C (category 1D)

Minimum process temperature :
-20°C

Threads for cable glands :
- M20x1.5 (standard)
- ½" NPT (option /A5)

All Rights Reserved. Copyright © 2004, Rota Yokogawa

FLAME PROOF AND DUST PROOF RAMC

Flame proof and dust proof RAMC with ATEX-certificate (option /KF1):

Certificate :
IBExU 05 ATEX 1086
Flame proof :
Ex d IIC T1 ... T6 ; group II ; category 2G
Dust proof :
Ex tD A20 IP6X TX; group II ; category 1D/2D
Max. surface temperature TX :corresp. process temperature
Housing :
Painted aluminium casting, type 91
Output signal (with electronic transmitter -E or -H) :
4–20 mA (2- wire unit, 3- wire unit) ; 0-20 mA (3- wire unit)
Power supply (with electronic transmitter -E or -H) :
2- or 3- wire unit
Limit switches :
Options /K1 to /K10 possible
Ambient temperature :
-20 °C to 60 °C (category 2G / 2D)
-20 °C to 55 °C (category 1D)
Minimum process temperature :
-20°C
Threads for cable glands :
- M20x1.5 (standard)
- ½" NPT (option /A5)
Temperature classification :
Table 8

Temp. class	Max. Process temperature		
	No extension	On Extension	On extension with insulation
T6	85°C	85°C	85°C
T5	100°C	100°C	100°C
T4	120°C	135°C	135°C
T3	120°C	200°C	200°C
T2	120°C	300°C	300°C
T1	120°C	370°C	350°C

Flame proof and dust proof RAMC with NEPSI-certificate (China) (option /NF1) :

Certificate :
GYJ071430
Flame proof :
Ex d IIC T6
Dust proof :
DIP A20 TA T1 - T6 IP67
Max. surface temperature TA: corresponding process temperature
Housing :
Painted aluminium casting type 91
Output signal (with electronic transmitter -E or -H) :
4–20 mA (2- wire unit, 3- wire unit) ; 0-20 mA (3- wire unit)
Power supply (with electronic transmitter -E or -H) :
2- or 3- wire unit
Limit switches :
Options /K1 to /K10 possible
Ambient temperature :
-20 °C to 60 °C
-20 °C to 55 °C (for use in zone 20)
Minimum process temperature :
-20°C
Threads for cable glands :
- M16x1.5 (standard)
- ½" NPT (option /A5)
Temperature classification :
Table 9

Temp. class	Max. Process temperature		
	No extension	On Extension	On extension with insulation
T6	85°C	85°C	85°C
T5	100°C	100°C	100°C
T4	120°C	135°C	135°C
T3	120°C	200°C	200°C
T2	120°C	300°C	300°C
T1	120°C	370°C	375°C

Flame proof and dust proof RAMC with CCOE-certificate (India) :

Option /KF1 must be selected. CCOE- certificate is available at your Yokogawa Sales Office.

Overview hazardous area certified instruments:

Unit	**Electronic transmitter**						**Limit switches**					**RAMC complete indicator**				
Location	Europe			USA	Canada	India	Europe			USA	Canada	Europe	China		India	Australia
Certification	ATEX			FM	FM	CCOE	ATEX			FM	CSA	ATEX	NEPSI	NEPSI	CCOE	SAA
Type of protection	IS	NI	IS/D	IS/NI	IS/NI	IS	IS/D	NI/D	IS/D	IS/NI	IS/NI	d/D	IS	d	d	IS
Option	/KS1	/KN1	/KS2	/FS1	/CS1	/KS1	/KS1	/KN1	/KS2	/FS1	/CS1	/KF1	/NS1	/NF1	/KF1	/SS1
Comments			*1) *7)	*2)	*2)	*3)	*4)	*4)	*1) *7)	*5)	*6)	*7)		*7)	*3) *7)	

Notation	IS = intrinsic safe; NI = non incendive; d = flame proof; D =dust proof
Comment *1)	Dust proof by RAMC housing
Comment *2)	Same certification for USA and Canada
Comment *3)	CCOE certificate available from Yokogawa Sales Office
Comment *4)	Dust proof only for limit switch
Comment *5)	Only for USA; power supply free selectable
Comment *6)	For USA and Canada; power supply must be option /WxA or /WxB (x=1 or 2 or 4)
Comment *7)	Only with housing type 91

All Rights Reserved. Copyright © 2004, Rota Yokogawa

INSTALLATION

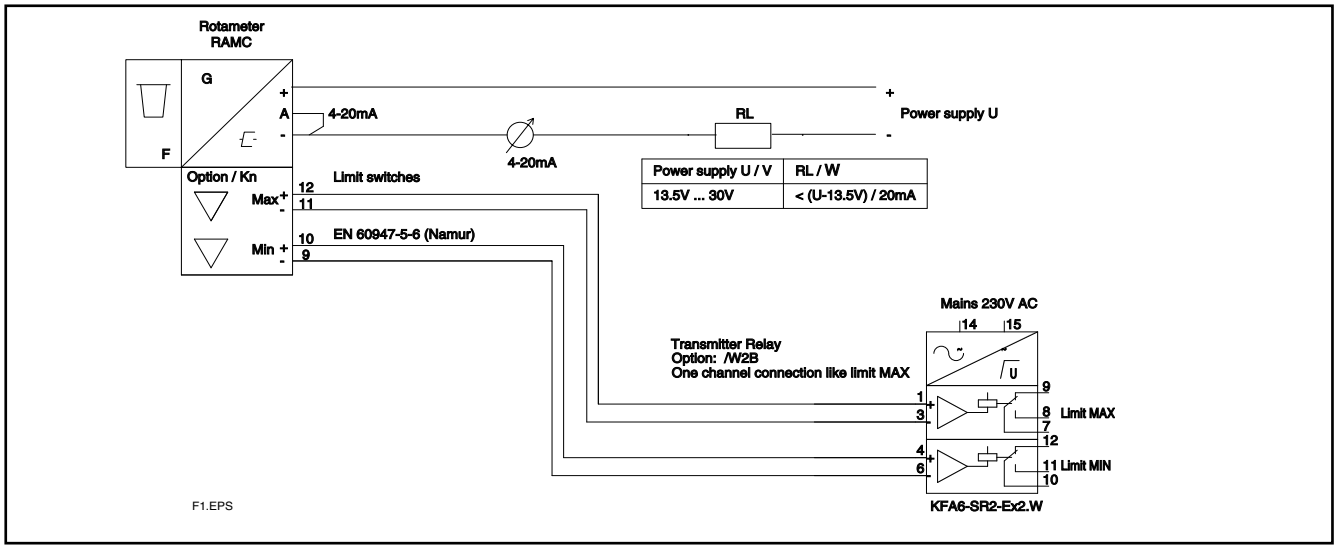

fig. 1 RAMC 2- wire unit with inductive limit switches and transmitter relay

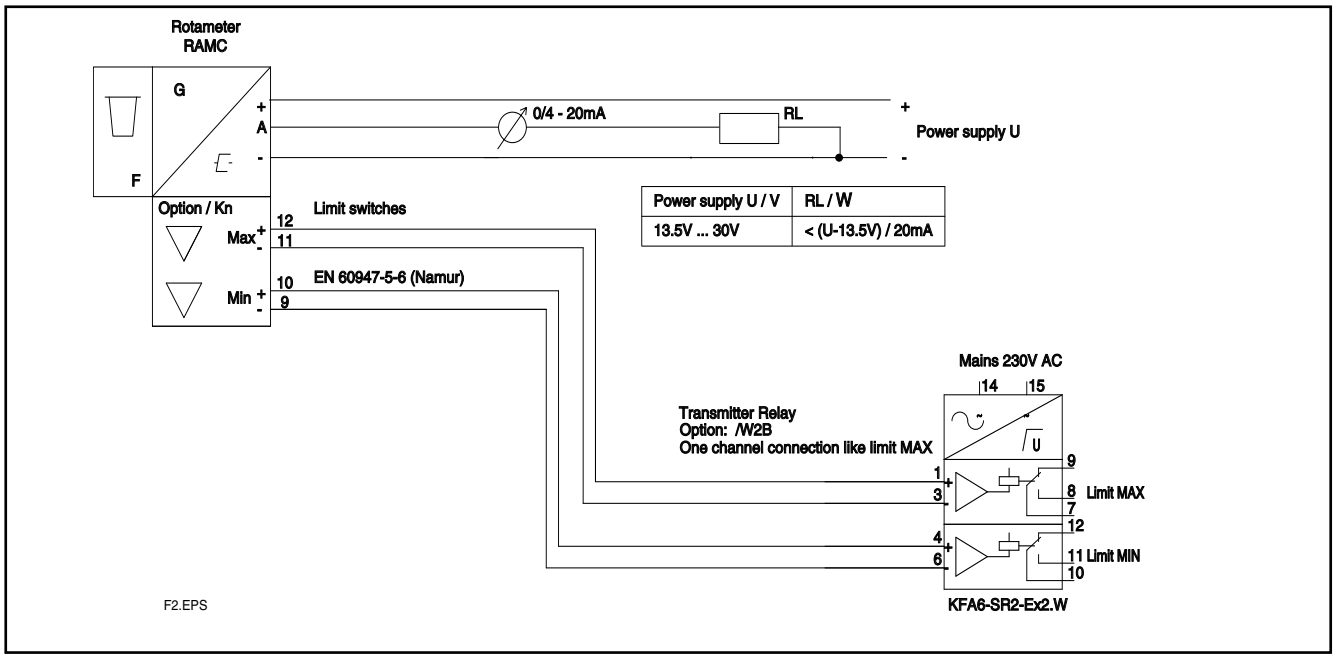

fig. 2 RAMC 3- wire unit with inductive limit switches and transmitter relay

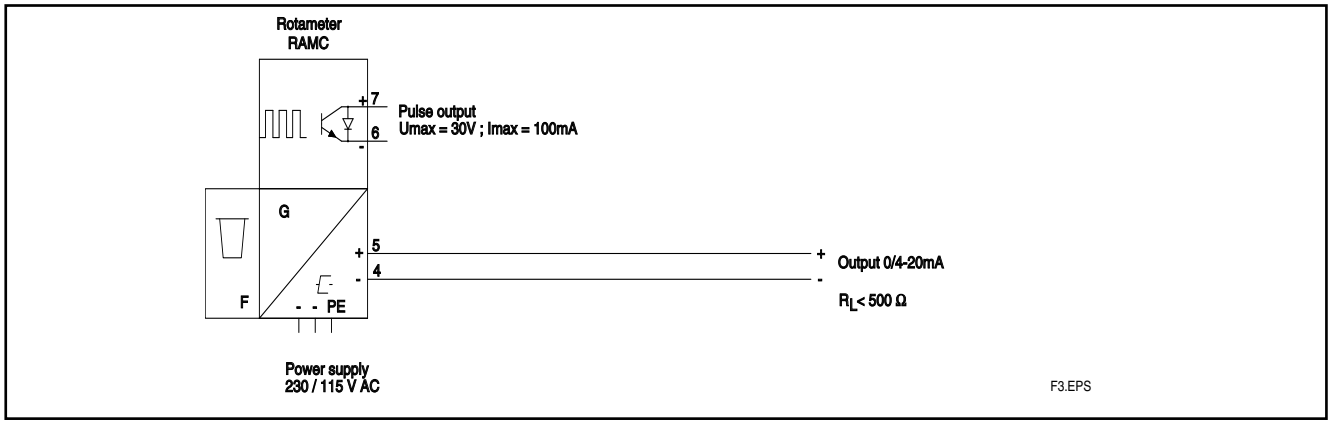

fig. 3 RAMC 4-wire unit with pulse output

All Rights Reserved. Copyright © 2004, Rota Yokogawa

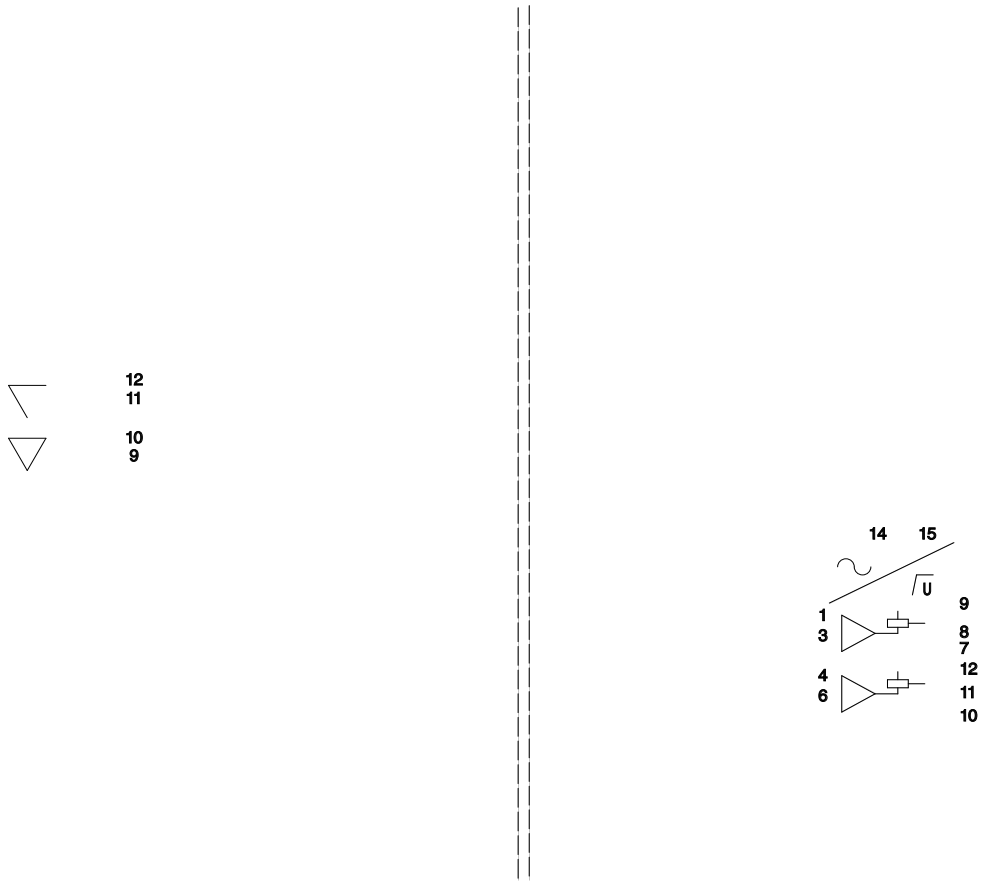

fig. 4 Intrinsic safe version according ATEX (option /KS1 or /KS2) : RAMC 2- wire unit with power supply, inductive limit switches and transmitter relay

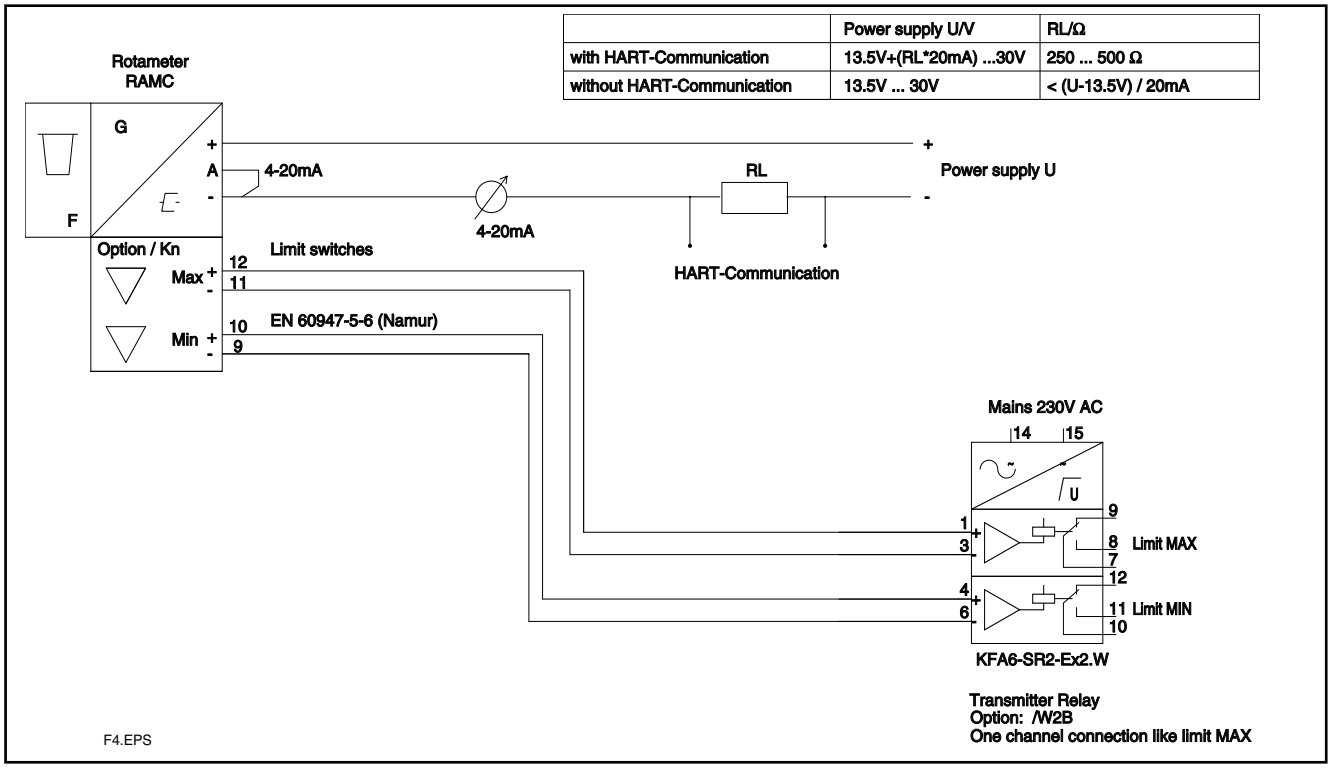

fig. 5 RAMC 2- wire unit with HART-communication, inductive limit switches and transmitter relay

All Rights Reserved. Copyright © 2004, Rota Yokogawa

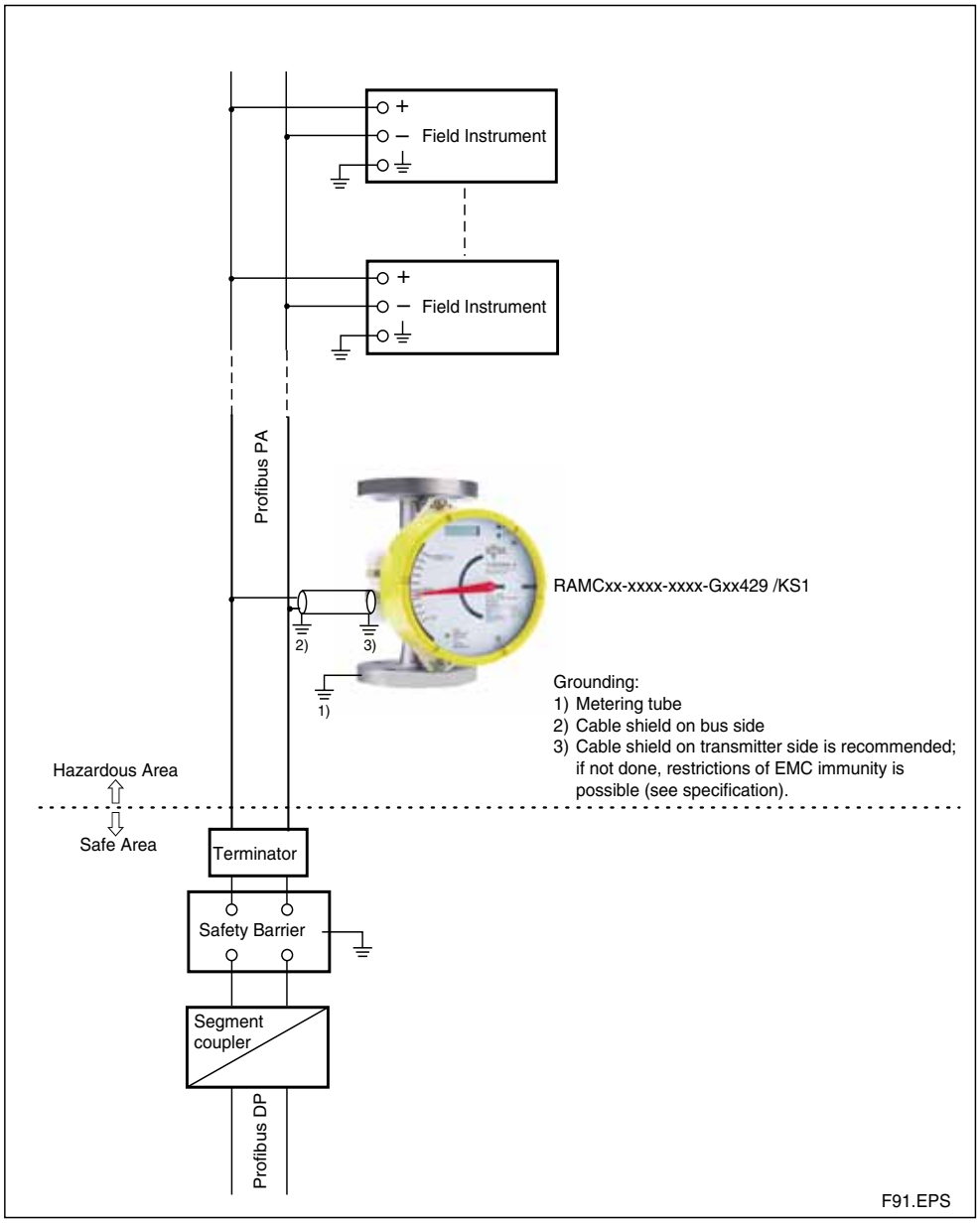

fig. 6 RAMC Profibus PA - communication

Planning and Installation Hints

- The user is responsible for the use of our flow meters regarding suitability and use as agreed.
- The actual operation pressure must be lower as the specified pressure limits of the Rotameter.
- Make sure that the wetted parts are resistant against the process medium.
- Ambient- and process temperature must be lower than the specified maximum values.
- If dirt accumulation is to be expected, we recommend to install a bypass pipe
- To avoid float bouncing in case of gas application notice the recommendations of VDI/VDE 3513 Sheet 3.
- To avoid mutual magnetic influence in case of parallel design of several Rotameters take care that the distance between the tube middle axes is not less than 300 mm. The distance to other ferric materials should not be less than 250 mm.
- Avoid static magnetic fields next to the Rotameter.

All Rights Reserved. Copyright © 2004, Rota Yokogawa

MODEL SPECIFICATIONS

Model	Suffix code	Description	Restrictions
RAMC01		Size DN 15 (½ inch)	for D4, D6, A1, A2, A3, T4, R4, T6, G6
RAMC23		Size DN 20 (¾ inch)	for D4, D6, A1, A2, A3, T4, R4, T6, G6
RAMC02		Size DN 25 (1 inch)	for D4, D6, A1, A2, A3, S2, S4, S5, T4, R4, T6, G6
RAMC03		Size DN 32 (1¼ inch)	for D4, D6, A1, A2, A3, S4, T6, G6
RAMC04		Size DN 40 (1½ inch)	for D4, D6, A1, A2, A3, S4, S5, T6, G6
RAMC05		Size DN 50 (2 inch)	for D4, D5, D6, A1, A2, A3, S2, S4,T4, R4
RAMC06		Size DN 65 (2½ inch)	for D4, D5, A1, A2, A3, S2, S4, T4, R4, T6, G6
RAMC08		Size DN 80 (3 inch)	for D4, D5, A1, A2, A3, S2, S4
RAMC09		3½ inch	for A1, A2
RAMC10		Size DN 100 (4 inch)	for D2, D4, A1, A2, S4, S4
RAMC12		Size DN 125 (5 inch)	for D2, A1, A2, S2
RAMC15		Size DN 150 (6 inch)	for D2, A1, A2
RAMCNN		Without measuring tube	
Process connection	-D2	EN flange PN 16, process connection dimension + facing acc. EN 1092-2 Form B1	
	-D4	EN flange PN 40, process connection dimension + facing acc. EN 1092-2 Form B1	
	-D5	EN flange PN 63, process connection dimension + facing acc. EN 1092-2 Form B1	
	-D6	EN flange PN 100, process connection dimension + facing acc. EN 1092-2 Form B1	
	-A1	ASME flange class 150, process connection dimension + facing acc. ASME B 16.5	
	-A2	ASME flange class 300, process connection dimension + facing acc. ASME B 16.5	
	-A3	ASME flange class 600, process connection dimension + facing acc. ASME B 16.5	
	-T6	NPT PN 40 female thread	
	-G6	G PN 40 female thread	
	-R4	Rp removable female thread	
	-S2	Thread acc. DIN 11851	
	-S4	Tri- clamp PN 10, PN16 acc. DIN 32676	
	-T4	NPT removable female thread	
	-S5	Flange Rosita PN 10	
	-NN	Without process connection	
Material of wetted parts	SS	Stainless steel	
	PF	Teflon lining	
	NN	Without wetted parts	Only with RAMCNN
Cone / Float	-nnnn	See tables 10 ... 12	
	-NNNN	Without measuring tube / without float	Only with RAMCNN
Indicator / Transmitter	-T	Indicator local	
	-E	Indicator electronic	
	-G	Indicator electronic with Profibus PA	Only with output 429
	-H	Indicator electronic with HART	Only with output 424
	-N	Without indicator	Only with housing NN
Housing / Type	90	Housing round blanc; SS	
	91	Housing round yellow; Al	
	NN	Without housing	Only with indicator N
Power supply / Output	240	230 V AC ; 4- wire; 0-20 mA	Only with indicator E; not with limit switches
	244	230 V AC ; 4- wire; 4-20 mA	Only with indicator E; not with limit switches
	140	115 V AC ; 4- wire; 0-20 mA	Only with indicator E; not with limit switches
	144	115 V AC ; 4- wire; 4-20 mA	Only with indicator E; not with limit switches
	430	24 V DC; 3- wire; 0-20 mA	Only with indicator E
	434	24 V DC; 3- wire; 4-20 mA	Only with indicator E
	424	24 V DC; 2- wire; 4-20 mA	Only with indicator E or H
	429	Profibus PA; 9 ... 32 V DC	Only with indicator G; not with limit switches
	NNN	Without power supply	Only with indicator T or N

OPTIONS

Options	Option code	Description	Restriction
Indicator	/A5	Thread for cable gland ASME ½´´ NPT female	Not with /A13
	/A12	US- engineering units	Only for indicator E + H
	/A13	Thread for cable gland ISO M20 x 1,5 female	Not with /A5, /KF1,/NF1, /KS2
	/A14	Housing color green	Only for housing 91
	/A16	Indicator on 95 mm extension	Only for housing 90 + 91
	/A17	Housing color green	Only for housing 90
	/A18	Housing color yellow	Only for housing 90
	/A20	Scale for type T66	Not with hazardous approval type; not with indicator
	/A21	Scale and EEPROM for type E66, H66, G66	Not with hazardous approval type not with indicator
	/A22	Scale for type T90, T91	Not with hazardous approval type; not with indicator
	/A23	Scale and EEPROM for type E90, H90, G90, E91, H91, G91	Not with hazardous approval type; not with indicator
	/A25	Pressure balance element	Not with /KS2, /KF1, /NF1 and housing 91 with /A5 or /A13
	/A26	Indicator for -40°C ambient temperature	Not with /K1, /K2, /K3, /K9, /K10, /KF1, /NF1, /KS2, /FS1, /CS1, /NS1, /SS1, power supply 14n + 24n.

All Rights Reserved. Copyright © 2004, Rota Yokogawa

Options	Option code	Description	Restriction
Marking	/B0	Tag plate (SS) on flange and marking on scale	Plate 9 x 40 mm; max. 45 digits
	/B1	Tag plate (SS) fixed by wire and marking on scale	Plate 9 x 40 mm; max. 45 digits
	/BT1	Software tag HART	8 digits for tag; 22 digits for long tag; only indicator H
	/BT2	Software tag, bus address for Profibus PA	32 digits for tag; 4 digits bus address; only indicator G
	/B4	Neutral version	Not with hazardous approval type
	/B8	Customer provided marking on label	
	/B10	Percent scale	
	/BG	Customer specific notes on scale	Max. 45 digits
	/BD	Dual scale	Adjustment only for the first mentioned fluid
Limit switches	/K1	MIN- contact	Not for power supply 14n + 24n
	/K2	MAX- contact	Not for power supply 14n + 24n
	/K3	MIN-MAX- contact, MIN-MIN- contact, MAX-MAX- contact	Not for power supply 14n + 24n
	/K6	MIN- contact “Fail safe” version	Not for power supply 14n + 24n
	/K7	MAX- contact “Fail safe” version	Not for power supply 14n + 24n
	/K8	MIN-MAX- contact “Fail safe” version	Not for power supply 14n + 24n
	/K9	MIN-MIN- contact “Fail safe” version	Not for power supply 14n + 24n
	/K10	MAX-MAX- contact “Fail safe” version	Not for power supply 14n + 24n
Pulse output	/CP	Pulse output isolated	Only for power supply 14n + 24n
Flange Facing	/D10	EN raised face B2 : Ra 0.8 - 3.2	Only for EN- flanges (D2, D4)
	/D11	EN groove Form D	Only for EN- flanges (D2, D4)
Hazardous area approvals	/KS1	ATEX intrinsically safe “ia”	Only for power supply 424, 430, 434, 429; for indicator T only with limit switches
	/KS2	ATEX intrinsically safe “ia” + dust proof	Only for power supply 424, 430, 434; for indicator T only with limit switches; only for housing 91
	/KF1	ATEX flame proof “d” / dust proof	Only for power supply 424, 430, 434; for indicator T only with limit switches; only for housing 91
	/KN1	ATEX category 3G “nL” / 3D	Only for power supply 424, 430, 434; for indicator T only with limit switches
	/FS1	FM intrinsically safe / non incendive electronic transmitter (USA), FM intrinsically safe / non incendive limit switches (USA)	Only for power supply 424 (electronic transmitter); for indicator T only with limit switches
	/CS1	FM intrinsically safe / non incendive electronic transmitter (Canada), CSA intrinsically safe limit switches (Canada)	Only for power supply 424 (electronic transmitter); for indicator T only with limit switches; limit switches only /K1, /K2, /K3, only in combination with power supply /WxA or /WxB
	/SS1	SAA intrinsically safe approval (Australia)	Only for power supply 424; for indicator T only with limit switches /K6 ... /K10; only housing 90
	/NS1	NEPSI intrinsically safe approval (China)	Only for power supply 424, 430, 434; for indicator T only with limit switches; only housing 90
	/NF1	NEPSI flame proof “d” / dust proof approval (China)	Not for power supply 14n, 24n, 429; for indicator T only with limit switches; only for housing 91
Test and certificates	/H1	Oil + fat free for wetted surfaces acc. ASTM G93-03 level C	
	/H3	Certificate pure water application	
	/P2	Certificate of compliance with the order acc. EN 10204: 2004 -2.1	
	/P3	As /P2 + Test report acc. EN 10204: 2004 -2.2	
	/P6	Material certificate acc. EN 10204: 2004 -3.1	Only for metallic pressurized parts
	/PM3	PAMI test (3 points: Process connection inlet, measuring tube, process connection outlet)	Only for SS material of wetted parts
	/PP	Pressure test report measuring system	
	/PT	Flow table for conversion	
	/P9	Dye penetration test of flange welding acc. to EN 571	Not for connection RAMC01-T6SS-[][]S0-…, RAMC01-G6SS-[][]S0-…; not for /Tx
	/WP	WPS acc. DIN EN ISO 15609-1 (Welding Procedure Specification) WPQR acc. DIN EN ISO 15614-1 (Welder Performance Qualification Record) WQC acc. DIN EN 1418 (Welder Qualification Certificate), robot welding WQC acc. DIN EN 287-1 (Welder Qualification Certificate), manual welding (SS) WQC acc. DIN EN ISO 6906-4 (Welder Qualification Certificate), manual welding (nickel alloy)	Not for connection RAMC01-T6SS-[][]S0-…, RAMC01-G6SS-[][]S0-…; not for /Tx
Gost approval	/QR1	GOST certificate for Russia	
	/QR2	GOST certificate for Kazakhstan	
	/QR3	GOST certificate for Uzbekistan	
Damping	/SD	Float damping system	Only for SS; not for cone 81 + 82; only for gas application
Heat tracing	/T1	Heat tracing, process connection G ¼`` PN 40 female thread	Only for SS material of wetted parts
	/T2	Heat tracing, process connection DN 15 PN 40	Only for SS material of wetted parts
	/T3	Heat tracing, process connection DN 25 PN 40	Only for SS material of wetted parts
	/T4	Heat tracing, process connection ASME ½´´ 150#	Only for SS material of wetted parts
	/T5	Heat tracing, process connection ASME 1´´ 150#	Only for SS material of wetted parts
	/T6	Heat tracing, process connection ¼´´ PN 40 NPT female thread	Only for SS material of wetted parts
Power supply for electronic transmitter	/UT	RN221N-B1, 20 ... 250V DC/AC, Ex i, Hart compatible	Only for indicator E + H
Power supply for limit switches (transmitter relay)	/W1A	KFA5-SR2-Ex1.W / 115 V AC, 1 channel	Only for limit switches /K1, /K2, /K3
	/W1B	KFA5-SR2-Ex2.W / 115 V AC, 2 channel	Only for limit switches /K1, /K2, /K3
	/W2A	KFA6-SR2-Ex1.W / 230 V AC, 1 channel	Only for limit switches /K1, /K2, /K3
	/W2B	KFA6-SR2-Ex2.W / 230 V AC, 2 channel	Only for limit switches /K1, /K2, /K3
	/W2E	KHA6-SH-Ex1 / 115/230 V AC, 1 channel, Fail Safe	Only for limit switches /K6 to /K7
	/W2F	2x KHA6-SH-Ex1 / 115/230 V AC, 1 channel, Fail Safe	Only for limit switches /K8 to /K10
	/W4A	KFD2-SR2-Ex1.W / 24 V DC, 1 channel	Only for limit switches /K1, /K2, /K3
	/W4B	KFD2-SR2-Ex2.W / 24 V DC, 2 channel	Only for limit switches /K1, /K2, /K3
	/W4E	KFD2-SH-Ex1 / 24 V DC, 1 channel, Fail Safe	Only for limit switches /K6 to /K7
	/W4F	2x KFD2-SH-Ex1 / 24 V DC, 1 channel, Fail Safe	Only for limit switches /K8 to /K10
Flange protection	/QK	Flange covers (EN flange)	Only for EN- flanges (D2, D4)
Delivery to Korea	/KC	With KC-mark in Korea	
Instruction manuals	/IEn	Quantity of instruction manuals in English	n = 1 to 9 selectable *)
	/IDn	Quantity of instruction manuals in German	n = 1 to 9 selectable *)
	/IFn	Quantity of instruction manuals in French	n = 1 to 9 selectable *)
Special order	/Z	Special design must be specified separately	
*) if no instruction manual is selected, only a CD with instruction manuals is shipped with the flowmeter			

Specify the following when ordering :

1) Model, suffix code and option code
2) Fluid name ; Process temperature ; Process density ; Process pressure ; Process viscosity
3) For gases : Condition of the scale (st. or actual)
4) Options : Tag No. ; Customer specific notes

All Rights Reserved. Copyright © 2004, Rota Yokogawa

PROCESS CONNECTION TABLE FOR METAL TUBES

Table 10

Process connection:

Pos	EN-Flange													ASME-Flange						Male thread		Clamp		Female thread			Female thread			Flange		Cone
	Form B1			Form B2				with groove (Opt.: D11)			Form B2 (Opt.: D10)			150lbs		300lbs		600lbs		DIN11851		Clamp		PN10-PN25			PN40			Rosista PN10		Float
	PN16	PN40		PN63		PN100		PN16	PN40		PN16	PN40								PN16/PN25/ PN40		PN10/PN16		NPT	Rp		NPT	G				Combination
	Code	Code	L(1)	Code	L(1)	Code	L(1)	Code	Code	L(1)	Code	Code	L(1)	Code	L(1)	Code	L(1)	Code	L(1)	Code	L(1)	Code	L(1)	Code	Code	L(1)	Code	Code	L(1)	Code	L(1)	Code
	D2	**D4**	mm	**D5**	mm	**D6**	mm	**D2**	**D4**	mm	**D2**	**D4**	mm	**A1**	mm	**A2**	mm	**A3**	mm	**S2**	mm	**S4**	mm	**T4**	**R4**	mm	**T6**	**G6**	mm	**S5**	mm	
1	-	DN15	250	-	-	DN15	250	-	DN15	250	-	DN15	250	1/2“	250	1/2“	250	1/2“	250	DN25 PN40	275	DN25 / 1“ DN32 DN40 / 1 1/2“ PN16	250	1/2“ 3/4“ PN25		295	1/2“ PN40		295	DN25 PN10	250	43 S0 44 S0 47 S0 51 S0
		DN20				DN20			DN20			DN20		3/4“		3/4“		3/4“														
		DN25				DN25	260		DN25			DN25		1“		1“		1“	260													
		DN32							DN32			DN32																				
		DN40							DN40			DN40																				
		DN50							DN50			DN50																				
2	-	DN15	250	-	-	DN15	250	-	DN15	250	-	DN15	250	1/2“	250	1/2“	250	1/2“	260	DN25 PN40	275	DN25 / 1“ DN32 DN40 / 1 1/2“ PN16	250	1/2“ 3/4“ PN25		295	3/4“ 1“ PN40		295	DN25 PN10	250	53 L1 ; 53 M1 53 S1 ; 54 L1 54 M1 ; 54 S1 57 L1 ; 57 M1 57 S1 ; 61 L1 61 M1 ; 61 S1 62 L1 ; 62 M1 62 V1
		DN20				DN20	260		DN20			DN20		3/4“		3/4“		3/4“														
		DN25				DN25			DN25			DN25		1“		1“		1“	270													
		DN32							DN32			DN32		1 1/4“		1 1/4“		1 1/4“														
		DN40							DN40			DN40		1 1/2“		1 1/2“		1 1/2“	280													
		DN50							DN50			DN50		2“		2“																
3	-	DN25	250	DN50	270	DN25	270	-	DN25	250	-	DN25	250	1“	250	1“	250	1“	270	DN50 PN25	275	DN50 / 2“ PN16	250	1“ PN16		310	1 1/4“ 1 1/2“ PN40		310	DN25 DN40 PN10	250	63 L2 ; 64 L2 63 M2 ; 64 M2 63 S2 ; 64 S2 64 V2
		DN32				DN32			DN32			DN32		1 1/4“		1 1/4“		1 1/4“														
		DN40				DN40			DN40			DN40		1 1/2“		1 1/2“		1 1/2“	280													
		DN50				DN50	280		DN50			DN50		2“		2“		2“														
4	DN100	DN50	250	DN50	260	_	_	DN100	DN50	250	DN100	DN50	250	2“	250	2“	250			DN65 DN80 PN25	275	DN65 / 3“ PN10	300	2“ 2 1/2“ PN10		325	2 1/2“ PN40		325	-	-	67 L5 ; 67 M5 67 S5 ; 71 L5 71 M5 ; 71 S5 72 L5 ; 72 M5 72 S5 ; 72V5
		DN65		DN65					DN65			DN65		2 1/2“		2 1/2“	260	2 1/2“	280													
		DN80		DN80	270	_	_		DN80			DN80		3“		3“		3“	290													
		DN100							DN100			DN100																				
5	DN100	DN80	250	DN80	270	_	_	DN100	DN80	250	DN100	DN80	250	3“	250	3“	260	_	_	DN100 PN25	300	DN100 / 4“ PN10	250	-		-	-		-	-	-	73 L8 ; 73 V8 74 L8 ; 74 V8 77 L8 ; 77 V8
	DN125(2)	DN100						DN125(2)	DN100		DN125(2)	DN100		3 1/2“		3 1/2“	270															
	DN150(2)							DN150(2)			DN150(2)			4“		4“																
														5“(2)		5“(2)	280															
														6“(2)	260	6“(2)																
6	DN100	DN100	250	-	-	-	-	DN100	DN100	250	DN100	DN100	250	4“	250	4“	270			DN125 PN16	300	-	-	-		-	-		-	-	-	81 11 82 11
	DN125(2)							DN125(2)			DN125(2)			5“(2)		5“(2)	280	_	_													
	DN150(2)							DN150(2)			DN150(2)			6“	260	6“(2)																

(1) L = face to face length

(2) Accuracy 2.5% instead of 1.6% (q_G = 50%)

All Rights Reserved. Copyright © 2004, Rota Yokogawa

FLOW TABLES FOR METAL TUBES

Table 11

Pos.	Water and liquids – Recommended combination – Max. flow m³/h [c]	Max. flow gpm [d]	Cone-Float-combin. Code	Pressure loss [a] mbar	Viscosity [b] mPa*s	Water and liquids – Alternative combination – Cone-Float-combin. Code	Pressure loss [a] mbar	Viscosity [b] mPa*s	Air and gases – Recommended combination – Max. flow m³/h [c]	Max. flow m³/h i.N. [e]	Max. flow scfm [f]	Cone-Float-combin. Code	Pressure loss [a] mbar	Air and gases – Alternative combination – Cone-Float-combin. Code	Pressure loss [a] mbar
1	0.025	0.11	43 S0	40	10	-	-	-	0.75	0	0.44	43 S0	45	-	-
	0.04	0.18	44 S0	40	80	-	-	-	1.2	1.1	0.7	44 S0	45	-	-
	0.063	0.28	47 S0	40	80	-	-	-	1.8	1.7	1.05	47 S0	45	-	-
	0.1	0.44	51 S0	40	80	-	-	-	3	2.8	1.75	51 S0	45	-	-
2	0.13	0.57	53 L1	12	50	-	-	-	4	3.6	2.3	53 L1	13	-	-
	0.16	0.7	-	-	-	53 M1	15	100	5.5	5	3.2	-	-	53 M1	21
	0.22	1.0	54 L1	12	50	-	-	-	-	-		-	-	-	-
	0.25	1.1	53 S1	40	100	54 M1	15	50	6.5	6	3.8	54L1	13	-	-
	0.32	1.4	-	-	-	57 L1	12	50	9	8.5	5	-	-	54 M1	21
	0.4	1.8	54 S1	40	50	57 M1	15	50	10	9	5.7	57 L1	13	-	v
	0.5	2.2	-	-	-	61 L1	12	50	14	13	8	-	-	57 M1	21
	0.63	2.8	57 S1	40	50	61 M1	15	100	16	15	9	61 L1	13	-	-
	0.8	3.5	-	-	-	62 L1	12	50	22	20	12	-	-	61 M1	21
	1.0	4.4	61 S1	40	100	62 M1	15	100	25	23	14	62 L1	13	-	-
	1.6	7.0	62 S1	40	100	-	-	-	34	32	20	-	-	62 M1	21
	2.2	10.1	-	-	-	62 V1	45	50	50	45	28	-	-	62 S1	45
3	1.3	5.7	63 L2	17	50	-	-	-	40	36	23	63 L2	19	-	-
	2.1	9.2	-	-	-	64 L2	17	50	50	47	29	-	-	63 M2	23
	2.5	11.0	63 S2	42	30	64 M2	17	10	60	55	35	64 L2	19	-	-
	4	17.6	64 S2	42	10	-	-	-	85	80	50	-	-	64 M2	23
	6	26.4	-	-	-	64 V2	43	50	120	110	70	-	-	64 S2	47
4	3.2	14	67 L5	13	50	-	-	-	100	90	57	67 L5	16	-	-
	5.0	22	-	-	-	71 L5	13	50	130	120	75	-	-	67 M5	25
	6.3	28	67 S5	47	30	-	-	-	160	150	90	71 L5	16	-	-
	8.5	37	-	-	-	72 L5	13	50	200	180	115	-	-	71 M5	25
	10	44	71 S5	47	5	72 M5	19	5	250	230	140	72 L5	16	-	-
	16	70	72 S5	47	5	-	-	-	340	320	200	-	-	72 m5	25
	25	110	-	-	-	72 V5	63	5	500	470	290	-	-	72 S5	54
5	25	110	73 V8	60	10	-	-	-	550	500	320	73 L8	30	-	-
	40	176	74 V8	60	10	-	-	-	850	800	500	74 L8	30	-	-
	63	277	77 V8	60	10	-	-	-	1400	1300	800	77 L8	30	-	-
6	100	440	81 11	70	10	-	-	-	-	-	-	-	-	-	-
	130	572	82 11	70	10	-	-	-	-	-	-	-	-	-	-

a) Pressure loss at the float with water or air.
b) For higher viscosity the specified precision is no more guaranteed.
c) Flow is referred to 20°C and 1 bar abs .
d) Flow in US Gallons per minute at 70°F .
e) Flow referred to 0°C and 1.013 bar abs at operation conditions of 20°C and 1,013 bar abs.
f) Flow in Standard cubic feet per minute referred to 60°F and 14,7 PSI at operation conditions of 70°F und 14,7 PSI abs.

For your special application please use the Rota Yokogawa Sizing-Program.

All Rights Reserved. Copyright © 2004, Rota Yokogawa

PROCESS CONNECTION- AND FLOW-TABLE FOR TUBES WITH PTFE LINING

Table 12

Pos.	Process connection: EN-Flange PN 16 Code D2	EN-Flange PN40 Code D4	EN-Flange L(1) mm	ASME-Flange 150 lbs Code A1	ASME-Flange 150 lbs L(1) mm	ASME-Flange 300 lbs Code A2	ASME-Flange 300 lbs L(1) mm	Water and liquids: Max. Flow m^3/h c)	Max. Flow gpm d)	Cone-Float-combination Code	Pressure loss a) mbar	Viscosity b) mPa*s	Air and gases: Max. Flow m^3/h c)	Max. Flow m^3/h i.N. e)	Max. Flow scfm f)	Cone-Float-combination Code	Pressure loss a) mbar
2	-		250		250	¾" 1"	250	0.1	0.45	51 A1	16	50	3.5	3.3	2	51 A1	20
								0.16	0.7	52 A1	16	50	5	4.7	2.9	52 A1	20
		DN15		¾"				0.25	1.12	53 A1	16	50	8.5	8	5	53 A1	20
		DN25		1"				0.4	1.8	54 A1	16	50	13	12	7.5	54 A1	20
								0.63	2.8	57 A1	16	50	20	18	11	57 A1	20
								1	4.5	61 V1	18	50	34	32	20	61 V1	22
3	-	DN25	250	1¼" 1½"	250	1¼" 1½"	250	1.6	7	62 A2	20	30	50	47	29	62 A2	25
		DN40						2.5	11.2	63 A2	20	10	85	80	50	63 A2	25
		DN50						4	18	63 V2	22	50	-	-	-	-	-
4	-	DN50 DN65 DN80	250	2½" 3"	260	2½" 3"	270	4	18	64 A5	20	30	130	120	75	64 A5	25
								6.3	28	67 A5	20	30	200	180	115	67 A5	25
								10	45	71 A5	20	5	350	330	200	71 A5	25
								16	70	71 V5	22	10	-	-	-	-	-
5	DN100		250	3½" 4"	270	3½" 4"	270	16	70	72 V8	25	10	500	470	290	72 V8	27
		DN80						25	110	73 V8	25	10	850	800	500	73 V8	27
								40	180	74 V8	25	10	-	-	-	-	-
6	DN100	DN100	250	4"	270	4"	270	63	280	77 10	30	10	-	-	-	-	-

(1) L = Mounting length
a) Pressure loss at the float with water or air.
b) As from this viscosity the specified precision is no more guaranteed.
c) Flow is referred to 20°C and 1 bar abs.
d) Flow in US Gallons per minute at 70°F.
e) Flow referred to 0°C and 1.013 bar abs at operation conditions of 20°C and 1,013 bar abs.
f) Flow in Standard cubic feet per minute referred to 60°F and 14,7 PSI at operation conditions of 70°F und 14,7 PSI abs.
For your special application please use the Rota Yokogawa Sizing-Program.

All Rights Reserved. Copyright © 2004, Rota Yokogawa

TEMPERATURE GRAPHS FOR RAMC METAL DESIGN, STANDARD AND INTRINSIC SAFE

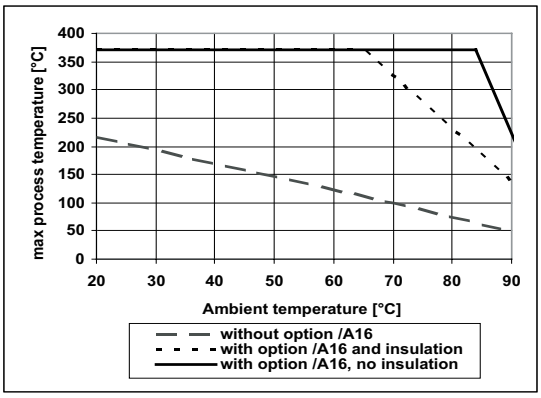

fig. 7a RAMC : - type 90 / 91
- only with indicator

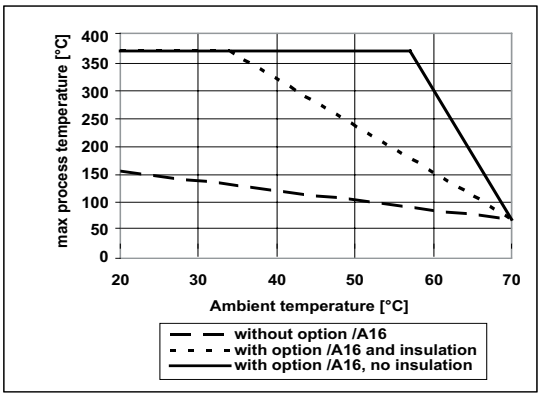

fig. 7b RAMC : - type 90 / 91
- with limit switches
- with electronic transmitter

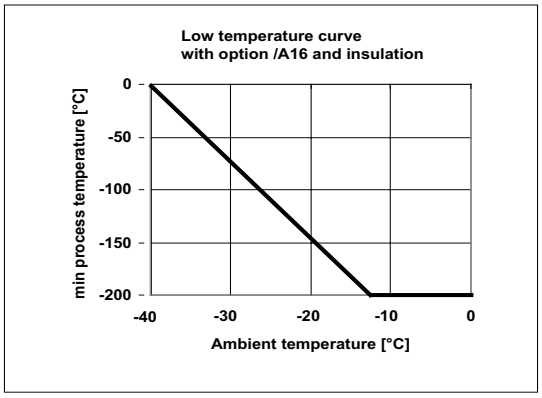

fig. 7c RAMC : - type 90 / 91
- with or without limit switches
- with or without electronic transmitter

T10.EPS

The temperature graphs are reference values for size DN100. They may be influenced negative by trapped heat, external heat sources or radiated heat and influenced positive for smaller sizes.
Insulation means rock wool between tube and indicator.
Units with electronic transmitter can show the temperature of the internal transmitter on the display or HART- type can show and supervise the internal temperature by HART-communication.
Units with PTFE lining are usable up to 130°C.
For units with explosion proof certification the temperature limits according the certificate of conformity must be regarded (see also page 4 to 6).

All Rights Reserved. Copyright © 2004, Rota Yokogawa

Minimum ambient temperatures:

Flow meter	Model code	Minimum ambient temperature
RAMC with local indicator	RAMCxx-xxxx-xxxx-TxxNNN	-25°C; -40°C with option /A26
RAMC with standard limit switches	RAMCxx-xxxx-xxxx-xxxxxx /K1.../K3	-25°C
RAMC with fail safe limit switches /K6.../K8	RAMCxx-xxxx-xxxx-xxxxxx /K6.../K8	-25°C; -40°C with option /A26
RAMC with fail safe limit switches /K9.../K10	RAMCxx-xxxx-xxxx-xxxxxx /K9.../K10	-25°C
RAMC with electronic transmitter	RAMCxx-xxxx-xxxx-Exx1xx RAMCxx-xxxx-xxxx-Hxx1xx RAMCxx-xxxx-xxxx-Exx2xx RAMCxx-xxxx-xxxx-Hxx2xx RAMCxx-xxxx-xxxx-Exx4xx RAMCxx-xxxx-xxxx-Hxx4xx	-25°C -25°C -25°C -25°C -25°C; -40°C with option /A26 *) -25°C; -40°C with option /A26 *)
RAMC with electronic transmitter PA	RAMCxx-xxxx-xxxx-Gxx429	-25°C
RAMC intrinsic safe type	RAMCxx-xxxx-xxxx-xxxxxx /KS1 RAMCxx-xxxx-xxxx-xxxxxx /KS1 /K1.../K3 RAMCxx-xxxx-xxxx-xxxxxx /KS1 /K6.../K8 RAMCxx-xxxx-xxxx-xxxxxx /KS1 /K9.../K10 RAMCxx-xxxx-xxxx-xxxxxx /KN1 RAMCxx-xxxx-xxxx-xxxxxx /KN1 /K1.../K3 RAMCxx-xxxx-xxxx-xxxxxx /KN1 /K6.../K8 RAMCxx-xxxx-xxxx-xxxxxx /KN1 /K9.../K10 RAMCxx-xxxx-xxxx-xxxxxx /FS1 /.... RAMCxx-xxxx-xxxx-xxxxxx /CS1 /.... RAMCxx-xxxx-xxxx-xxxxxx /NS1 /.... RAMCxx-xxxx-xxxx-xxxxxx /SS1 /....	-25°C; -40°C with option /A26 *) -25°C -25°C; -40°C with option /A26 *) -25°C -25°C; -40°C with option /A26 *) -25°C -25°C; -40°C with option /A26 *) -25°C -25°C -25°C -25°C -25°C
RAMC flame proof or dust proof type	RAMCxx-xxxx-xxxx-xxxxxx /KF1 /.... RAMCxx-xxxx-xxxx-xxxxxx /NF1 /.... RAMCxx-xxxx-xxxx-xxxxxx /KS2 /....	-20°C

*) Below -25°C the LC-display and HART- communication will not work. Also the push buttons should not be used below -25°C !

DIMENSIONS AND WEIGHTS

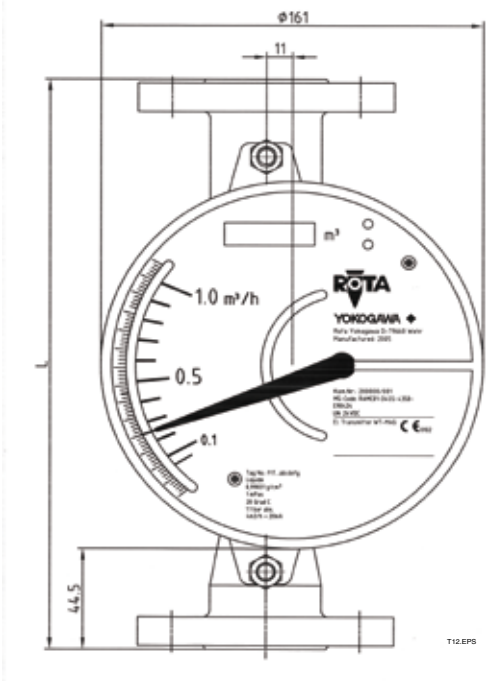

fig. 8a Front view housing type 90

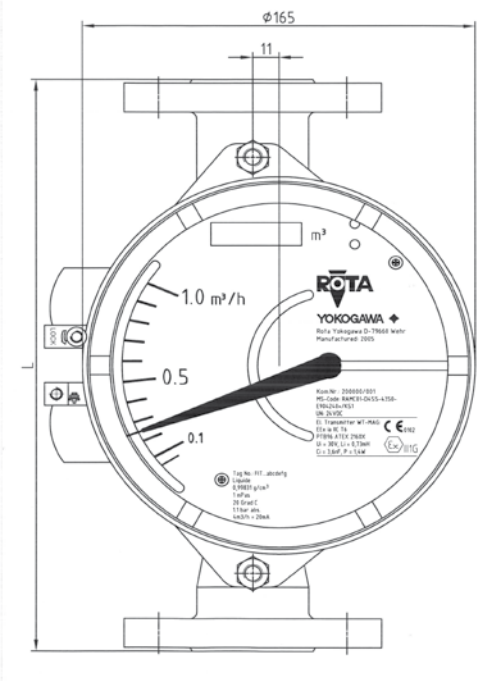

fig. 8b Front view housing type 91

All Rights Reserved. Copyright © 2004, Rota Yokogawa

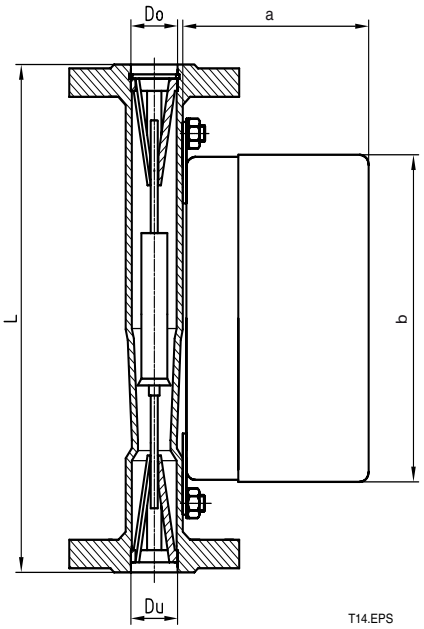

fig. 9 Metal version

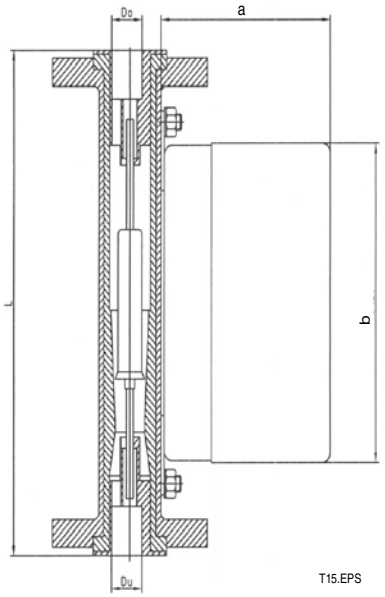

fig. 10 Metal version with lining

	a mm	b mm
Housing type 90	104	161
Housing type 91 standard	110	165
Housing type 91 flame proof , option /KF1	118	165

Table 13

Inner diameter of stainless steel flanges								Inner diameter of flanges with PTFE- lining			
Pos. *)	EN-flange without groove			ASME-flange			Rosita-flange	Pos. *)	EN- flange	ASME-flage	
	Size	Du mm	Do mm	Size	Du mm	Do mm	Du=Do mm		Size	Size	Du = Do mm
1	DN15-DN50	20.7	20.7	½´´ - 1´´	20.7	20.7	20.7	----	----	----	----
2	DN15-DN50	29.5	29.5	½´´	20.7	20.7	29.5	2	DN15-DN25	¾´´ - 1´´	23.5
				¾´´ - 2´´	29.5	29.5					
3	DN25-DN50	45.2	45.2	1´´	32.2	32.2	45.2	3	DN25-DN50	1¼´´ - 1½	36.0
				1¼´ - 2´´	45.2	45.2					
4	DN50-DN100	62.0	76.0	2´´	62.0	65.5	-----	4	DN50-DN80	2½´´ - 3´´	66.0
				2½´´ - 3´´	62.0	76.0					
5	DN80-DN150	94.0	94.0	3´´ - 6´´	94.0	94.0	-----	5	DN80-DN100	3½´´ - 4´´	82.0
6	DN100-DN150	116.0	116.0	4´´ - 6´´	116.0	116.0	-----	6	DN100	4´´	110.0
*) see table 10, 11, 12											

All Rights Reserved. Copyright © 2004, Rota Yokogawa

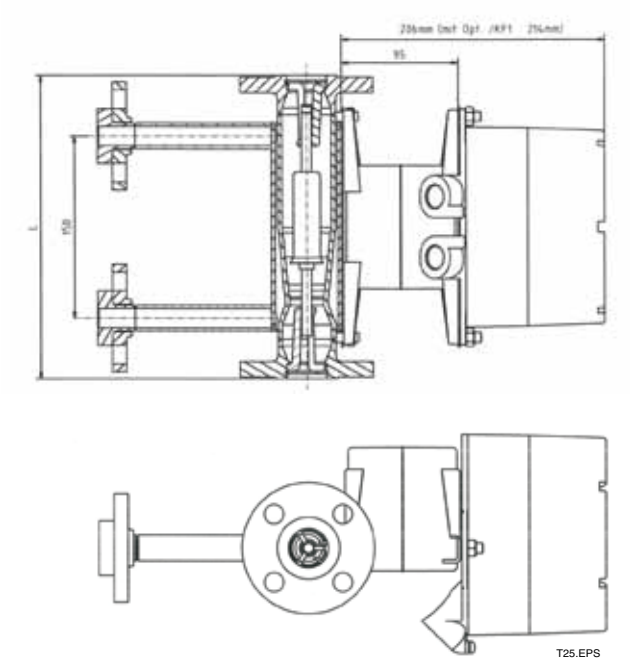

fig. 11 RAMC type 91 and Option /A16 and T2

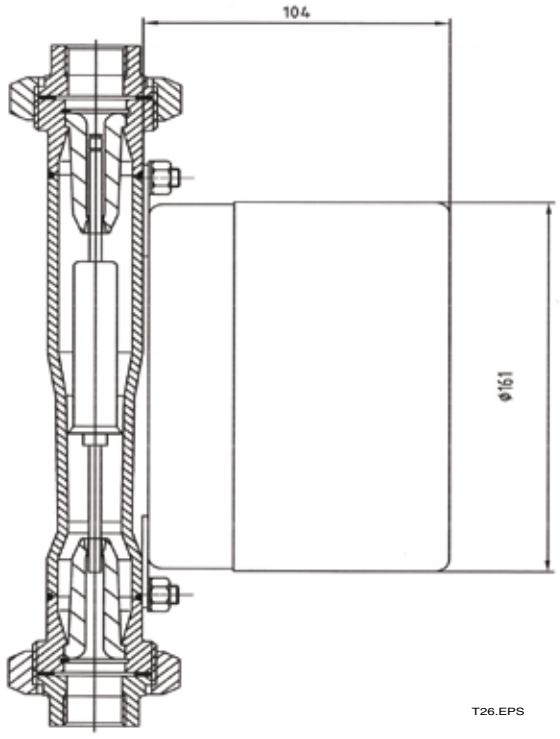

fig. 12 RAMC with connection R4/ T4

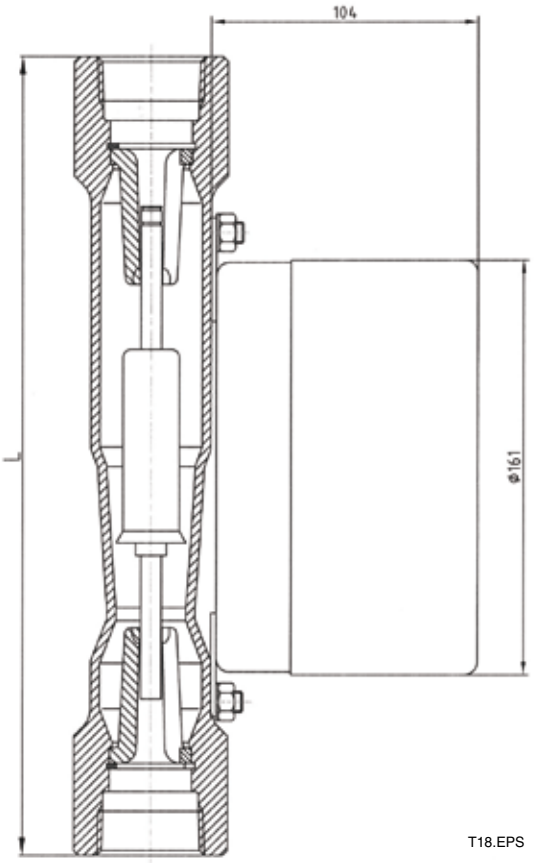

fig. 13 RAMC with connection T6/ G6

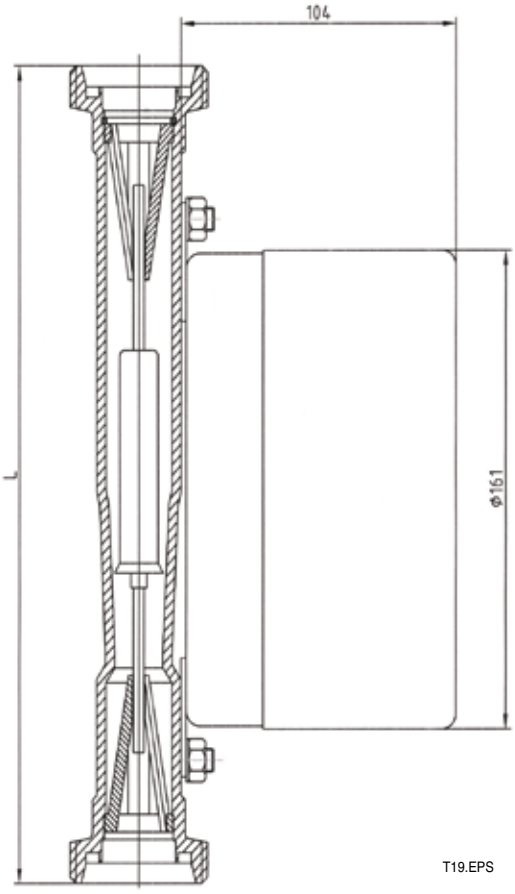

fig. 14 RAMC with connection S2

All Rights Reserved. Copyright © 2004, Rota Yokogawa

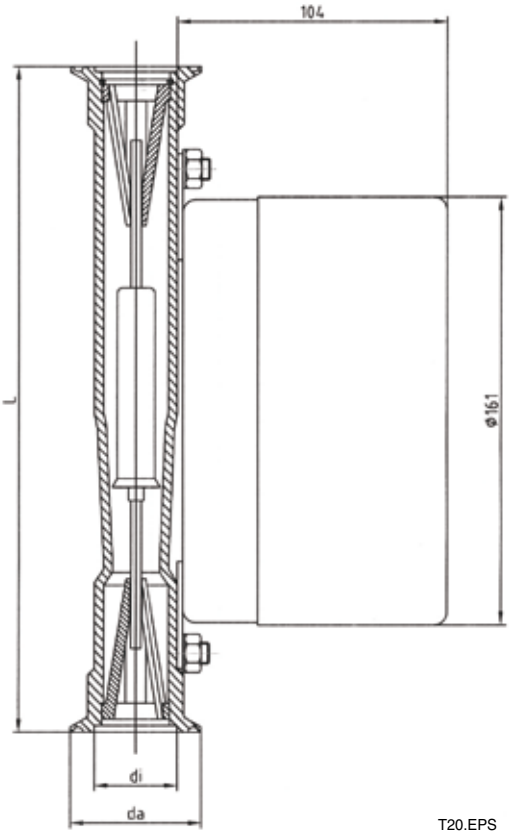

fig. 15 RAMC with connection S4

Table 14 Diameter for connection sizes S4

Position *)	Size [mm]	di [mm]	da [mm]
1	DN25 / 1´´	36	50.5
	DN32	36	50.5
	DN40 / 1 ½ ´´	36	50.5
2	DN25 / 1´´	36	50.5
	DN32	36	50.5
	DN40 / 1 ½ ´´	36	50.5
3	DN50 / 2´´	47.8	64
4	DN65 / 3´´	72.1	91
5	DN100 / 4´´	97.6	119
*) see table 10, 11, 12			

Table 15 Weights

Position *)	Weight [kg]
1	3 - 5
2	3 - 5
3	6.5 - 8
4	8.6 - 11
5	13 - 16
6	17 - 20
*) see table 10, 11, 12	
Indicator on distance (option /A16) additional 1kg	

YOKOGAWA ELECTRIC CORPORATION
World Headquarters
9-32, Nakacho 2-chome, Musashino-shi
Tokyo 180-8750
Japan
www.yokogawa.com

YOKOGAWA CORPORATION OF AMERICA
2 Dart Road
Newnan GA 30265
USA
www.yokogawa.com/us

YOKOGAWA EUROPE B.V.
Euroweg 2
3825 HD AMERSFOORT
The Netherlands
www.yokogawa.com/eu

YOKOGAWA ELECTRIC ASIA Pte. LTD.
5 Bedok South Road
Singapore 469270
Singapore
www.yokogawa.com/sg

YOKOGAWA CHINA CO. LTD.
3F Tower D Cartelo Crocodile Building
No.568 West Tianshan Road Changing District
Shanghai, China
www.yokogawa.com/cn

YOKOGAWA MIDDLE EAST B.S.C.(c)
P.O. Box 10070, Manama
Building 577, Road 2516, Busaiteen 225
Muharraq, Bahrain
www.yokogawa.com/bh

Yokogawa has an extensive sales and distribution network.
Please refer to the European website (www.yokogawa.com/eu) to contact your nearest representative.

YOKOGAWA

Rotameter™ is a trademark of Rota Yokogawa GmbH & Co. KG, a subsidiary of Yokogawa Electric Corporation, Japan. In the United Kingdom Rotameter™ is a trademark of Emerson Electric Co.

All Rights Reserved. Copyright © 2004, Rota Yokogawa
Subject to change without notice