Fundamentals of Power Measurement

Unit Relationships

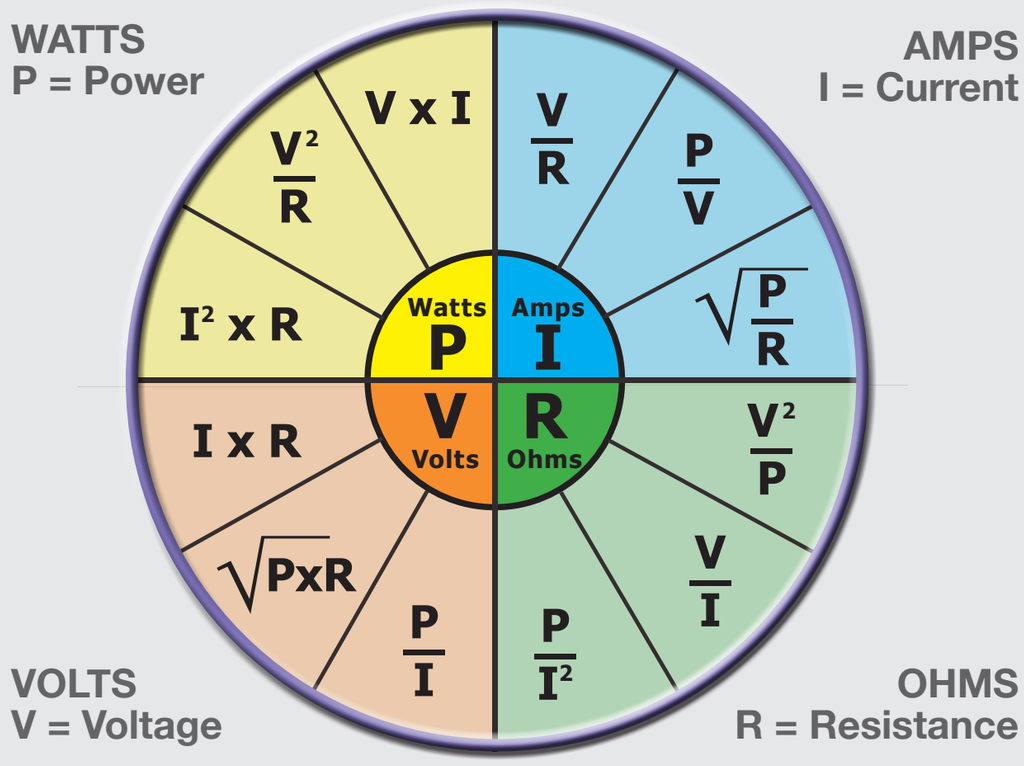

Average, RMS, Peak, Peak-to-Peak Conversation

Known Value	Average	RMS	Peak	Peak-to-Peak
Average	1.0	1.11	1.57	3.14
RMS	0.9	1.0	1.414	2.828
Peak	0.637	0.707	1.0	2.0
Peak-to-Peak	0.32	0.3535	0.5	1.0

Three Phase System

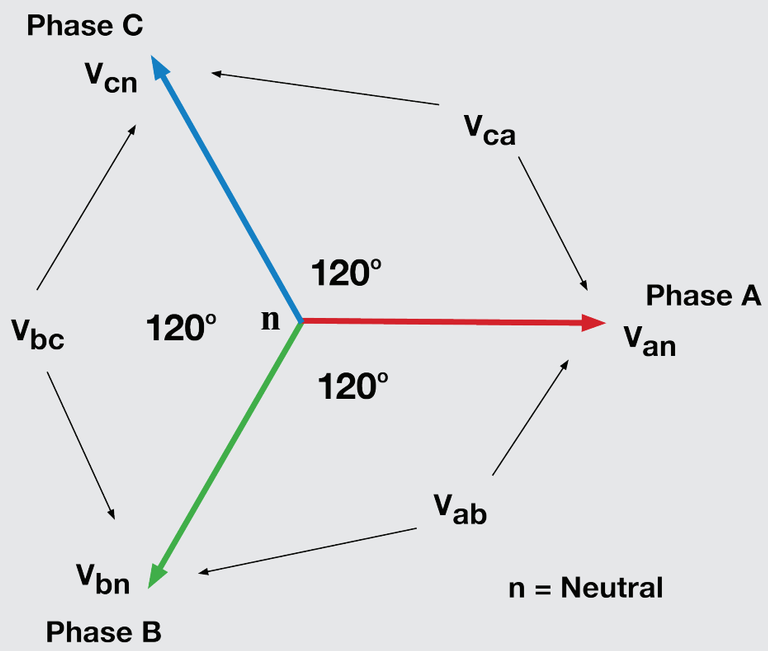

Balanced three phase diagram

$$V_{line\text{-}line} = \sqrt{3} * V_{line\text{-}neutral}$$

Mechanical Power

$$P_m = \frac{2 \times \pi \times \text{Rotating Speed}}{60\ (\text{Sec/Min})} \times \text{Torque}$$

$$\text{Synchronous Speed} = \frac{120 \times \text{Frequency}}{\text{Number of Poles}}$$

Electrical Power

DC Power Measurement

Watts $W = V \times A$

AC Power Measurement

POWER RELATIONSHIPS

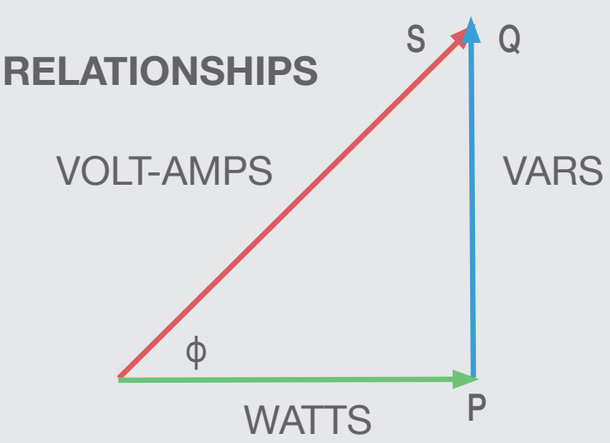

Active Power

Watts $P = V_{rms} \times A_{rms} \times \cos\phi$

Reactive Power

VARS $Q = V_{rms} \times A_{rms} \times \sin\phi$

Apparent Power

Volt-Amps $S = V_{rms} \times A_{rms}$

Displacement Power Factor

$PF = \cos\phi$

True Power Factor

$$PF = \frac{W}{VA}$$

$$\textbf{Efficiency} = \frac{\text{Output Power}}{\text{Input Power}} = \frac{P_m}{\text{Electrical Input Power}}$$

A WORD OF CAUTION

NEVER Open circuit the secondary side of a current transformer while it is energized!

This could cause serious damage to the CT and could possibly be harmful to equipment operators.

The Precision Makers

Blondel Transformation

Blondel theory states that total power is measured with *ONE LESS* wattmeter than the number of *WIRES*.

1-P 2-W	1 Wattmeter
1-P 3-W	2 Wattmeters
3-P 3-W	2 Wattmeters
3-P 3-W	3 Wattmeters
3-P 4-W	3 Wattmeters

1 Wattmeter Method

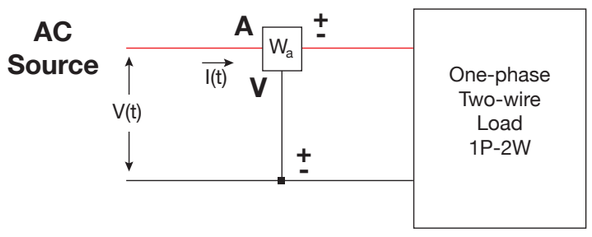

$$P_T = W_a$$

$$PF_T = \frac{W_a}{VA_a}$$

2 Wattmeter Method

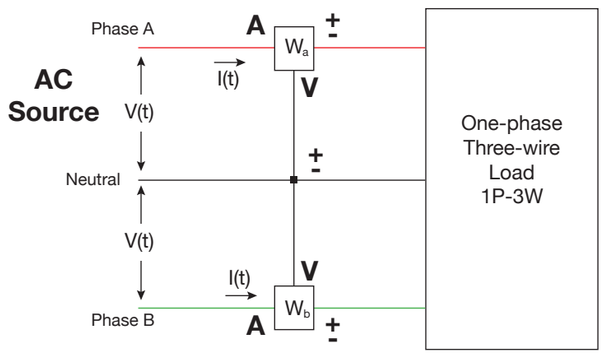

$$P_T = W_a + W_b$$

$$PF_T = \frac{W_a + W_b}{(VA_a + VA_b)}$$

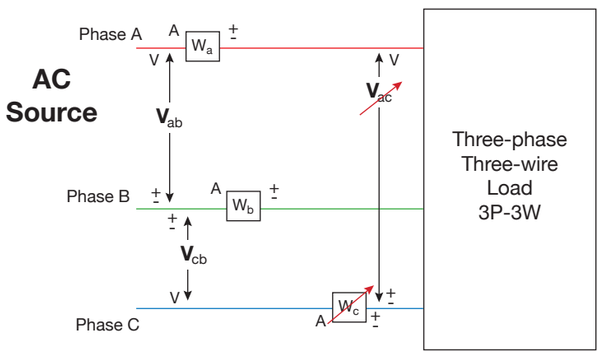

$$P_T = W_a + W_b$$

$$PF_T = \frac{W_a + W_b}{\frac{\sqrt{3}}{2}(VA_a + VA_b)}$$

3 Wattmeter Method

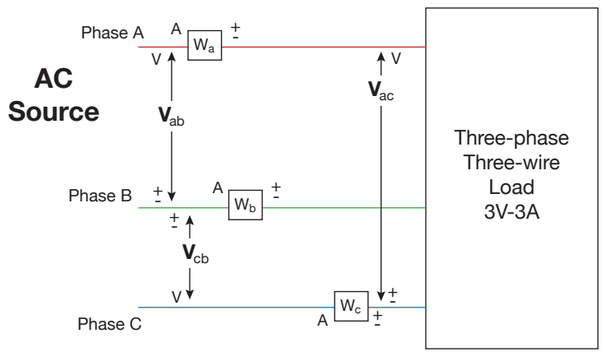

$$P_T = W_a + W_b$$

$$PF_T = \frac{W_a + W_b}{\frac{\sqrt{3}}{3}(VA_a + VA_b + VA_c)}$$

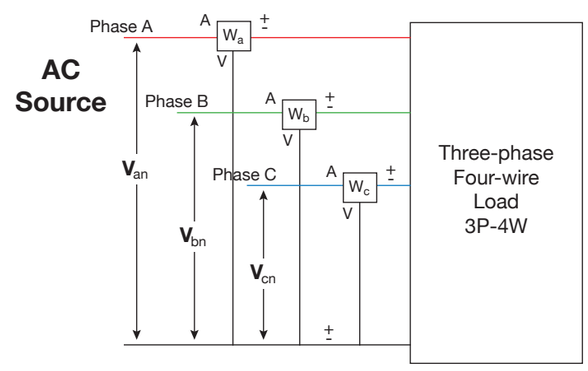

$$P_T = W_a + W_b + W_c$$

$$PF_T = \frac{W_a + W_b + W_c}{(VA_a + VA_b + VA_c)}$$

Harmonic Measurements

Distorted AC Waveforms

Elements of a distorted or non-sinusoidal waveform consist of Sine Waves of various:
- Amplitudes
- Frequencies
- Phase

Because of the Phase difference in some of the harmonics, negative, or reverse power can actually be produced.

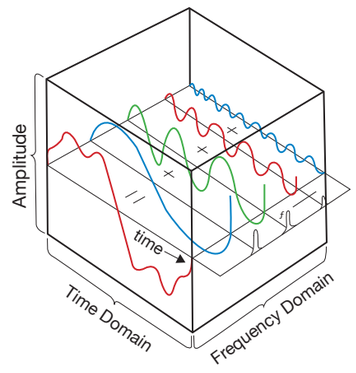

Harmonics are defined as Voltages, Currents or Power at frequencies that are a multiple of the fundamental frequency.

Total Power of the Distorted Waveform is calculated as:

$P_{total} = V_0 \times I_0 + V_1 \times I_1 \times \cos\theta_1 + V_2 \times I_2 \times \cos\theta_2 + V_3 \times I_3 \times \cos 0_3 + \ldots + V_n \times I_n \times \cos\theta_n$

OR More Precisely

$P_{total} = V_0 \times I_0 + \Sigma_{min} V_n \times In \times \cos\theta_n$

$$I_{THD} = \frac{\sqrt{\sum_{k=2}^{max} I(k)^2}}{I(Total)} * 100$$

Typical UL and CSA Method

$$I_{THD} = \frac{\sqrt{\sum_{k=2}^{max} I(k)^2}}{I(k=1)} * 100$$

Typical IEC Method

k = Harmonic Order; 1, 2, 3, . . .etc

Normal Mode
True RMS Measurement

$$P = \frac{1}{T}\int_0^T v(t) * i(t)\, dt$$

$$U_{RMS} = \sqrt{\frac{1}{T}\int_0^T v(t)^2\, dt}$$

$$I_{RMS} = \sqrt{\frac{1}{T}\int_0^T i(t)^2\, dt}$$

Harmonics Mode
NOT True RMS Measurement

$$P = \sum_{k=min}^{max} P(k)$$

$$U = \sqrt{\sum_{k=min}^{max} U(k)^2}$$

$$I = \sqrt{\sum_{k=min}^{max} I(k)^2}$$

k = Harmonic Order; 1, 2, 3, . . .etc

Power Analyzer vs Oscilloscope

Functions	WT1800 Power Analyzer	DLM2000 Oscilloscope
Bandwidth	DC - 2MHz	DC - 500MHz Power DC - 50MHz
Accuracy	0.05% reading +0.1% range Calibrated Traceable Measurement System	1.5% at input terminals, at DC Power approx at 3.5% Based on Probe Accuracy
Input Method	Direct Connections to High Voltage & High Current	Probes for high frequency & small currents
Resolution	Typical 16-bit 65,636 levels	Typical 8-bit 256 levels